EUROBOOR

FOR PROFESSIONALS BY PROFESSIONALS

CATALOG **2012**

FOR PROFESSIONALS BY PROFESSIONALS

Yvestos Welding Services - The Netherlands

Project: Railway track repair work - Rotterdam Central Station August 2011

35 YEARS OF INNOVATION

Time flies. Almost 35 years ago we were the first company to put the magnetic drilling system on the market. Back then we did this as a distributor on behalf of the Dutch market.

I joined the family business in 1982 which at the time had no more than four employees. Through the years we always wanted to do things better. “Listen properly to customers’ wishes and make sure you live up to expectations” … that’s what my father used to tell me time and again. His advice continues to be one of the strong pillars this company’s success is based on. We consider customers to be our partners as well given the fact that our best product developments are in line with their requirements. The added value is that we are perfectly familiar with both our products and the customer’s individual situation which means we will always come up with the best solution.

Thanks to this mentality today Euroboor has become a manufacturer specialising in portable industrial metal cutting tools.

Albert Koster
Managing Director

Index

Foreword	1
Index	2
For Professionals by Professionals	3
MAGNETIC DRILLING MACHINES	**7**
ECO.32	8
ECO.32-T	10
ECO.40/2	12
ECO.50	14
ECO.50-T	16
ECO.80/4	18
ECO.100/4	20
ECO.100/4D	22
AIR.52/3	24
ANNULAR CUTTERS/DRILL BITS	**27**
High Speed Steel (HSS)	28
High Speed Steel Cobalt (HSS-Co)	32
Tungsten Carbide Tipped (TCT)	34
Annular cutter sets	36
Pilot pins	37
Twist drills 19,05 mm Weldon shank	38
Countersink drills	38
Twist drills	39
Drill bit sets	40
ACCESSORIES	**43**
Coolant system	44
Morse tapers	44
Extension adaptors	45
Power assists	45
Drill chuck adaptors	46
Morse taper adaptors	46
Weldon adaptors	47
Pipe adaptor kit	47
Machine cases	48
Vacuum adaptor kit	49
Personal safety equipment	49
Measuring tools	49
Other accessories	50
Cutting oil	51
TAPPING TOOLS	**53**
Machine taps - through holes	54
Machine taps - blind holes	55
Tapping chucks	56
Tap collets	57
Machine tapping set	57
BEVELING MACHINES	**59**
LKF.200	60
LKF.450/2	62
Cutting plates	64
Milling heads	65
ROTARY BURRS	**66**
Type A - Cylinder without end cut	67
Type B - Cylinder with end cut	67
Type C - Ball nosed cylinder	67
Type D - Ball	68
Type E - Oval	68
Type F - Ball nosed tree	68
Type G - Arc pointed tree	69
Type H - Flame	69
Type J - 60 degree cone	69
Type K - 90 degree cone	70
Type L - Ball nosed tree	70
Type M - Cone	70
Type N - Inverted cone	71
Rotary Burrs sets	72
SAWING MACHINES	**73**
EHC.230/2V	74
EHC.230/3	75
EDC.140	76
EBS.400	77
Saw blades	78
General terms and conditions	79
Notes	80

COLOPHON CATALOG 2012

Euroboor B.V. Nederland

Address:
Kryptonstraat 110
2718 TD Zoetermeer
Postbus 423,
2700 AK Zoetermeer
The Netherlands

T +31 (0) 79 361 49 90
F +31 (0) 79 361 49 89
E info@euroboor.com

www.kernboormachines.nl
www.euroboor.com

This catalog is intended for those involved in our company. Euroboor BV does not sell to individuals. For Dealer/Distributor addresses we refer to our websites.

No part of this catalog may be reproduced, or copied without prior written consent.

Euroboor is a registered Trademark. All pictures in this catalog are meant to give an impression. This catalog has been compiled with the utmost care. Nevertheless it is possible that certain information included is now outdated or no longer complete. Euroboor is not responsible for results of actions taken purely on the basis of this catalog. Euroboor therefore recommends taking professional expert advice before undertaking any actions purely based on the information in this catalog

Design and Technical Realization	Aan Zee, Noordwijk
Internet	www.aanzee.nl
Photography	Visions B.V., Lisse
Internet	www.visions.nl

For professionals by professionals

Euroboor, a family business specialised in Industrial Portable Tools, was founded in 1977 as a sole proprietorship. Today the company is proud of its 110 employees and is actively involved in 58 countries.

At the Euroboor Company we are constantly upgrading our technology to provide our customers with leading edge products that perform. Not only do we provide our customers with top quality machining and tooling, we know that to keep them coming back to the Euroboor Company we must provide superior customer care and top quality performance.

Through our 35 years of experience, we have recognized that providing superior service does not end with a quality product - it takes products, service, and performance. We pride ourselves on being a value-added operation, offering you service from beginning to end and everywhere in between.

Products

Euroboor presents the best of the best in this industry. We produce and supply our customers with products they can count on and quality they expect to receive. At present Euroboor products are represented and available in 58 countries worldwide.

Euroboor's product selection includes Magnetic drilling machines, Annular Cutters, Beveling machines, Sawing machines and many accessories. For each single product the emphasis is on safety, diversity and quality. We provide an extensive package of expert products.

Quality guaranteed

At each production phase all Euroboor tools are subjected to the strictest quality checks. Quality inspectors study each component with the utmost care to guarantee nothing but the best quality.

Once all tested products have been packaged, they are stored in the factory warehouses. Subsequently machines are randomly taken away from stock, dismantled entirely at the test centre, accurately re-measured and checked. When everything is seen to be in perfect order the products may leave the factory.

Service and support

Not only does Euroboor provide top quality equipment, we bring you uncompromised service as well. Our knowledgeable sales staff is on call 24 hours a day to answer your questions or provide on-site service. We ensure our customers they can depend upon our support. Moreover we can communicate in 7 languages: Dutch, English, German, French, Italian, Russian and Romanian.

Euroboor dedicates careful attention to informing the distribution partners. By offering intensive support to our dealers/wholesalers we help them choose the right products.

Also, we are happy to provide practical and technical information. But we have much more to offer. We are perfectly aware of the fact that customers prefer smaller stocks more often. So we ensure prompt and frequent delivery.

EUROBOOR CATALOG 2012

Intertek

In order to gain faster, more efficient entry to any market in the world, all Euroboor's Magnetic Drilling Machines are thoroughly tested by Intertek, an internationally well-known company who offers efficient product testing, inspection and certification solutions.

For North America and Canada we have the ETL Mark, for Europe we have the CE, GS and S Mark and for Australia we have the EMC Mark.

Technical Service Department

One of Euroboor's unique selling points is our 'in house' Technical Service Department. Our dedicated engineers are mainly responsible for maintenance and repair on Magnetic Drilling Machines. But also, product development and testing new machines is a key activity.

Service vehicles

Euroboor's service vehicles provide yet another special service. Should dealers be unable to answer customers' questions, they may call us.

The GPS Vehicle Tracking System service means vehicles can be traced to make sure they reach clients promptly. All drivers are experienced engineers with expert knowledge. Inside the vehicles all common parts are kept in stock. This service means great advantages for all parties involved.

Euroboor and exhibitions

Since its foundation Euroboor has been attending exhibitions. At first this was only focused on the Dutch Market, but since 2009 we have exhibited at international fairs like the International Hardware Fair in Cologne and the EMO in Hannover (both in Germany).

In the near future we will also be joining fairs in Eastern Europe, North- and South America and Asia. Our website will be providing detailed information on a regular basis.

Vertical Information Portal

The Euroboor's Vertical Information Portal, www.euroboor.com will contain information in many languages about magnetic drilling technology, tools and accessories for the Metal Cutting Industry.

Besides this we will provide news, editorial content, digital publications and e-commerce capabilities. In the near future we will also provide dynamic multi-media applications including social networking, video posting and blogging.

EUROBOOR CATALOG 2012

MAGNETIC DRILLING MACHINES

Safety

All Euroboor electrical tools are designed for the world market. Obviously all user safety regulations have been met.

There are general regulations which apply within Europe though various countries have their own interpretations. Euroboor has taken all of these requirements into account and therefore puts nothing but the safest products into the market.

Quality control

All Euroboor electrical tools are meticulously tested and checked a number of times. In the unlikely event of defects or malfunctions, Euroboor will repair any defect or malfunction provided the warranty conditions are met. In principle, no warranty applies to machinery which is hired. If the user dismantles the machine, the warranty is void.

Warranty

Without exception, all Euroboor magnetic drilling machines are subjected to the strictest quality checks at every stage. Quality inspectors examine every part with great care and accuracy, in order to guarantee top-quality products.

Once the products have been packaged with instructions and the warranty, they are stored in the factory warehouse. Machines are then randomly taken from stock and dismantled, accurately gauged and inspected at the test centre. Only when every aspect is seen to be in order do the products leave the factory. This also helps ensure Euroboor quality.

Complete delivery

The ECO.32, ECO.32-T, ECO.40/2, ECO.50 and ECO.50-T are supplied in a professional plastic carrying case.

The ECO.80/4 and the ECO.100/4 (D) are packaged in a handy trolley with two wheels and a retractable handle.

ECO.32

MAGNETIC DRILLING MACHINE UP TO ø 32 MM

The ECO.32 has been the best selling magnetic drilling machine in the recent years. The sufficient basic model has been provided with an eager single speed 1000 W motor. At no more than 12 kg the ECO.32 is the lightest and most compact magnetic drilling machine in the ECO series.

ECO.32

TECHNICAL SPECIFICATIONS

ANNULAR CUTTERS	ø 12 - 32 mm
TWIST DRILLS	ø 1 - 13 mm
LENGTH	255 mm
WIDTH	110 mm
HEIGHT	370 - 512 mm
STROKE	150 mm
WEIGHT	12 kg
MAGNET (L x W x H)	160 x 80 x 42 mm
MAGNETIC FORCE	1500 kg
MOTOR POWER	1000 W
TOTAL POWER	1050 W
SPEED	(I) 775 min^{-1}
SPINDLE	19,05 mm (¾") Weldon
AVAILABLE	110 - 120 and 220 - 240 Volt AC

ORDER CODE:

ECO.32

ACCESSORIES:

PAGE 42 - 57

STANDARD DELIVERY

ORDER CODE	DESCRIPTION	PAGE
KSP.Q	Coolant system (new model) with Quick Connect	44
020.0145	Coolant ring Quick Connect for KSP.Q	44

ADDITIONAL PRODUCTS AVAILABLE

ORDER CODE	DESCRIPTION	PAGE
IBK.13	Drill chuck ø 1,5 - 13 mm, ½"x 20 UNF (inner)	46
IBK.14	Adaptor 19,05 mm (¾") Weldon (outer) - ½" x 20 UNF (outer)	47
IBK.15	Adaptor ½" x 20 UNF (inner) - ½" x 20 UNF (outer)	47
020.0116Q	Spindle ½" x 20 UNF- 19,05 mm (¾") Weldon Quick Connect	44
HCS.KIT	Annular cutter set with 19,05 mm Weldon shank (2x ø 14 I 2x ø 18 I 2x ø 22 mm, including 1x pilot pin)	36
SSPI.06-14	Twist drills with 19,05 mm Weldon shank I ø 6 - 14 mm x 30 mm (Increasing by 1 mm increments)	38
SPI.06-14	Twist drills with 19,05 mm Weldon shank I ø 6 - 14 mm x 55 mm	38
	(Increasing by 1 mm increments)	
TDS.200	HSS-Co (M35) Twist drill set (25 pieces, increasing by 0,5 mm increments)	40

ECO.32-T

MAGNETIC DRILLING MACHINE UP TO Ø 32 MM / THREADING UP TO M12

Need to drill and tap a M12 hole at a 13 meter height? Surely you could use some help. The ECO.32-T was designed to complete your tailor-made work. Improved operation and ergonomics will keep you mobile, which is perfect for construction work on site or at the workshop.

ECO.32-T

TECHNICAL SPECIFICATIONS

ANNULAR CUTTERS	ø 12 - 32 mm
TWIST DRILLS	ø 1 - 13 mm
COUNTERSINKING	ø 10 - 25 mm
THREADING	M3 - M12
LENGTH	255 mm
WIDTH	110 mm
HEIGHT	370 - 512 mm
STROKE	150 mm
WEIGHT	12,6 kg
MAGNET (L x W x H)	160 x 80 x 48 mm
MAGNETIC FORCE	1500 kg
MOTOR POWER	1000 W
TOTAL POWER	1050 W
SPEED	(I) 100 - 600 min^{-1}
SPINDLE	19,05 mm (¾") Weldon
AVAILABLE	110 - 120 and 220 - 240 Volt AC

ORDER CODE:

ECO.32-T

ACCESSORIES:

PAGE 42 - 57

STANDARD DELIVERY

ORDER CODE	DESCRIPTION	PAGE
KSP.Q	Auto Coolant system (new model) with Quick Connect	44
020.0145	Coolant ring Quick Connect for KSP.Q	44
TCM.8-12	Tap holders M8 - M12	57

ADDITIONAL PRODUCTS AVAILABLE

ORDER CODE	DESCRIPTION	PAGE
IBK.13	Drill chuck ø 1,5 - 13 mm, ½"x 20 UNF (inner)	46
IBK.14	Adaptor 19,05 mm (¾") Weldon (outer) - ½" x 20 UNF (outer)	47
IBK.15	Adaptor ½" x 20 UNF (inner) -½" x 20 UNF (outer)	47
020.0116Q	Spindle ½" x 20 UNF- 19,05 mm (¾") Weldon Quick Connect	44
HCS.KIT	Annular cutter set with 19,05 mm Weldon shank (2x ø 14 I 2x ø 18 I 2x ø 22 mm, including 1x pilot pin)	36
SCE.25	Countersink drill ø 10 - 25 mm with 19,05 mm Weldon shank	38
SSPI.06-14	Twist drills with 19,05 mm Weldon shank I ø 6 - 14 mm x 30 mm (Increasing by 1 mm increments)	38
SPI.06-14	Twist drills with 19,05 mm Weldon shank I ø 6 - 14 mm x 55 mm (Increasing by 1 mm increments)	38
TDS.200	HSS-Co (M35) Twist drill set (25 pieces, increasing by 0,5 mm increments)	40
Taps	M3 - M12	

ECO.40/2

MAGNETIC DRILLING MACHINE UP TO ø 40 MM

With a great touch of overcapacity, working is even more fun. The ECO.40/2 magnetic drilling machine has a 1050 W motor and can be mechanically adjusted to two rotational speeds. This makes it perfect for hard metal magnetic drilling and twist drilling.

ECO.40/2

TECHNICAL SPECIFICATIONS

ANNULAR CUTTERS	ø 12 - 40 mm
TWIST DRILLS	ø 1 - 16 mm
LENGTH	255 mm
WIDTH	110 mm
HEIGHT	395 - 540 mm
STROKE	150 mm
WEIGHT	12 kg
MAGNET (L x W x H)	60 x 80 x 42 mm
MAGNETIC FORCE	1500 kg
MOTOR POWER	1050 W
TOTAL POWER	1100 W
SPEED	(I) 720 min^{-1}
	(II) 1300 min^{-1}
SPINDLE	19,05 mm (¾") Weldon
AVAILABLE	110 - 120 and 220 - 240 Volt AC

ORDER CODE:

ECO.40/2

ACCESSORIES:

PAGE 42 - 57

STANDARD DELIVERY

ORDER CODE	DESCRIPTION	PAGE
KSP.Q	Coolant system (new model) with Quick Connect	44
020.0145	Coolant ring Quick connect for KSP.Q	44

ADDITIONAL PRODUCTS AVAILABLE

ORDER CODE	DESCRIPTION	PAGE
IBK.13	Drill chuck ø 1,5 - 13 mm, ½"x 20 UNF (inner)	46
IBK.14	Adaptor 19,05 mm (¾") Weldon (outer) - ½" x 20 UNF (outer)	47
IBK.15	Adaptor ½" x 20 UNF (inner) - ½" x 20 UNF (outer)	47
IBK.16	Drill chuck ø 1 – 16 mm with B16 spindle connection	46
020.0116Q	Spindle ½" x 20 UNF – 19,05 mm (¾") Weldon Quick Connect	44
HCS.KIT	Annular cutter set with 19,05 mm Weldon shank (2x ø 14 I 2x ø 18 I 2x ø 22 mm, including 1x pilot pin)	36
SSPI.06-14	Twist drills with 19,05 mm Weldon shank I ø 6 - 14 mm x 30 mm (Increasing by 1 mm increments)	38
SPI.06-14	Twist drills with 19,05 mm Weldon shank I ø 6 - 14 mm x 55 mm (Increasing by 1 mm increments)	38
TDS.200	HSS-Co (M35) Twist drill set (25 pieces, increasing by 0,5 mm increments)	40

ECO.50

MAGNETIC DRILLING MACHINE UP TO ø 50 MM

If you wish to use maximum power without having to sacrifice mobility, the ECO.50 with Morse Taper 2 connection is definitely what you need. For years the ECO.50 has been the “benchmark” machine among users. At 15% extra capacity the ECO.50 outdistances competitors.

ECO.50

TECHNICAL SPECIFICATIONS

ANNULAR CUTTERS	ø 12 - 50 mm
TWIST DRILLS	ø 1 - 23 mm
LENGTH	245 mm
WIDTH	160 mm
HEIGHT	385 - 550 mm
STROKE	170 mm
WEIGHT	13,5 kg
MAGNET (L x W x H)	170 x 85 x 48 mm
MAGNETIC FORCE	1850 kg
MOTOR POWER	1250 W
TOTAL POWER	1375 W
SPEED	(I) 380 min^{-1}
	(II) 690 min^{-1}
SPINDLE	MC2 – 19,05 mm (¾") Weldon
AVAILABLE	110 - 120 and 220 - 240 Volt AC

ORDER CODE:

ECO.50

ACCESSORIES:

PAGE 42 - 57

STANDARD DELIVERY

ORDER CODE	DESCRIPTION	PAGE
KSP.Q	Coolant system (new model) with Quick Connect	44
IMC.20	Coolant Morse Taper 2 with 19,05 mm Weldon connection	44

ADDITIONAL PRODUCTS AVAILABLE

ORDER CODE	DESCRIPTION	PAGE
IBK.16	Drill chuck ø 1,5 - 16 mm with B16 spindle connection	46
IBQ.16	Quick Connect drill chuck ø 16 mm with B18 spindle connection	46
B16-MC2	Adaptor B16 - Morse Taper 2	46
B18-MC2	Adaptor B18 - Morse Taper 2	46
MC.2	Morse Taper 2 with 19,05 mm (¾") Weldon connection	44
MCQ.20	Morse Taper 2 19,05 mm Quick Connect, suitable for Auto Coolant system KSP.Q	44
HCS.KIT	Annular cutter set with 19,05 mm Weldon shank (2x ø 14 I 2x ø 18 I 2x ø 22 mm, including 1x pilot pin)	36
SSPI.06-14	Twist drills with 19,05 mm Weldon shank I ø 6 - 14 mm x 30 mm (Increasing by 1 mm increments)	38
SPI.06-14	Twist drills with 19,05 mm Weldon shank I ø 6 - 14 mm x 55 mm (Increasing by 1 mm increments)	38
TDS.200	HSS-Co (M35) Twist drill set (25 pieces, increasing by 0,5 mm increments)	40

ECO.50-T

MAGNETIC DRILLING MACHINE UP TO Ø 50 MM / THREADING MACHINE UP TO M20

The ECO.50-T magnetic drilling/threading machine is most remarkable in the Euroboor program. This versatile all-rounder is lubricated using nanotechnology. This evidently helps to extend the life of the mechanical parts.

ECO.50-T

TECHNICAL SPECIFICATIONS

ANNULAR CUTTERS	ø 12 - 50 mm
TWIST DRILLS	ø 1 - 23 mm
COUNTERSINKING	ø 10 - 40 mm
TAPPING	M3 - M20
LENGTH	245 mm
WIDTH	160 mm
HEIGHT	385 - 550 mm
STROKE	170 mm
WEIGHT	14 kg
MAGNET (L x W x H)	170 x 85 x 48 mm
MAGNETIC FORCE	1850 kg
MOTOR POWER	1250 W
TOTAL POWER	1375 W
SPEED	(I) 100 - 280 min^{-1}
	(II) 185 - 530 min^{-1}
SPINDLE	MC2 – 19,05 mm (¾") Weldon
AVAILABLE	110 - 120 and 220 - 240 Volt AC

ORDER CODE:

ECO.50-T

ACCESSORIES:

PAGE 42 - 57

STANDARD DELIVERY

ORDER CODE	DESCRIPTION	PAGE
KSP.Q	Coolant system (new model) with Quick Connect	44
IMC.20	Coolant Morse Taper 2 with ø 19,05 mm Weldon connection	44
TCM.10-16	Tap holders M10 - M16	57

ADDITIONAL PRODUCTS AVAILABLE

ORDER CODE	DESCRIPTION	PAGE
IBK.16	Drill Chuck ø 1,5 - 16 mm with B16 spindle connection	46
B16-MC2	Adaptor B16 - Morse Taper 2	46
IBQ.16	Quick Connect drill chuck 16 mm with B18 spindle connection	46
B18-MC2	Adaptor B18 - Morse Taper 2	46
MC.2	Morse Taper 2 with 19,05 mm Weldon connection	44
MCQ.20	Morse Taper 2 19.05 mm Quick Connect, suitable for Coolant system KSP.Q	44
HCS.KIT	Annular cutter set with 19,05 mm Weldon shank (2x ø 14 I 2x ø 18 I 2x ø 22 mm, including 1x pilot pin)	36
SCE.25	Countersink drill ø 10 - 25 mm with 19,05 mm Weldon shank	38
SCE.40	Countersink drill ø 10 - 40 mm with 19,05 mm Weldon shank	38
SSPI.06-14	Twist drills with 19,05 mm Weldon shank I ø 6 - 14 mm x 30 mm (Increasing by 1 mm increments)	38
SPI.06-14	Twist drills with 19,05 mm Weldon shank I ø 6 - 14 mm x 55 mm (Increasing by 1 mm increments)	38
TDS.200	HSS-Co (M35) Twist drill set (25 pieces, increasing by 0,5 mm increments)	40
Taps	Taps M3 - M20	54

ECO.80/4

MAGNETIC DRILLING MACHINE UP TO Ø 80 MM

The ECO.80/4 is a solid bruiser with Morse Taper 3 connection. Thanks to the 4-speed gear box this no-nonsense magnetic drilling machine is perfect for challenging twist drilling up to ø 31,75mm.

ECO.80/4

TECHNICAL SPECIFICATIONS

ANNULAR CUTTERS	ø 12 - 80 mm
TWIST DRILLS	ø 1 - 31,75 mm
LENGTH	365 mm
WIDTH	190 mm
HEIGHT	510 - 710 mm
STROKE	260 mm
WEIGHT	28 kg
MAGNET (L x W x H)	230 x 100 x 64 mm
MAGNETIC FORCE	3000 kg
MOTOR POWER	1700 W
TOTAL POWER	1800 W
SPEED	(I) 200 min^{-1}
	(II) 320 min^{-1}
	(III) 415 min^{-1}
	(IV) 650 min^{-1}
SPINDLE	: MC3 – 19,05 mm (¾") Weldon
AVAILABLE	110 - 120 and 220 - 240 Volt AC

ORDER CODE:

ECO.80/4

ACCESSORIES:

PAGE 42 - 57

STANDARD DELIVERY

ORDER CODE	DESCRIPTION	PAGE
KSP.Q	Coolant system (new model) with Quick Connect	44
IMC.30/19-N	Coolant Morse Taper 3 with 19,05 mm Weldon connection	44

ADDITIONAL PRODUCTS AVAILABLE

ORDER CODE	DESCRIPTION	PAGE
IBK.16	Drill Chuck ø 1,5 - 16 mm with B16 spindle connection	46
B16-MC3	Adaptor B16 - Morse Taper 3	46
IBQ.16	Quick Connect drill chuck 16 mm with B18 spindle connection	46
B18-MC3	Adaptor B18 - Morse Taper 3	46
MC.3	Morse Taper 3 with 19,05 mm Weldon connection	44
MCQ.30	Morse Taper 3 - 19,05 mm Quick Connect, suitable for Coolant system KSP.Q	44
MC.3/32	Morse Taper 3 - 31,75 mm Weldon for cutters ø 61 - 130 mm	44
IMC.30/32-N	Coolant Morse Taper 3 - 31,75 mm Weldon suitable for coolant system KSP.Q (for cutters ø 61 – 100mm)	44
HCS.KIT	Annular cutter set with 19,05 mm Weldon shank (2x ø 14 I 2x ø 18 I 2x ø 22 mm, including 1x pilot pin)	36
SSPI.06-14	Twist drills with 19,05 mm Weldon shank I ø 6 - 14 mm x 30 mm (Increasing by 1 mm increments)	38
SPI.06-14	Twist drills with 19,05 mm Weldon shank I ø 6 - 14 mm x 55 mm (Increasing by 1 mm increments)	38
TDS.200	HSS-Co (M35) Twist drill set (25 pieces, increasing by 0,5 mm increments)	40

ECO.100/4

MAGNETIC DRILLING MACHINE UP TO Ø 100 MM / THREADING M30

Our showpiece has been provided with every option you may think of: an unprecedentedly powerful motor, state-of-the-art electrically and mechanically adjustable torque and speed settings. The ECO.100/4 not only has a new 4-speed gear box, the transport case too has been improved ergonomically and is changed into a trolley.

ECO.100/4

TECHNICAL SPECIFICATIONS

ANNULAR CUTTERS	ø 12 - 100 mm
	ø 61 - 100 mm (MC3/32)
TWIST DRILLS	ø 1- 31,75 mm
COUNTERSINKING	ø 10 - 50 mm
THREADING	M3 - M30
LENGTH	365 mm
WIDTH	190 mm
HEIGHT	510 - 710 mm
STROKE	260 mm
WEIGHT	28 kg
MAGNET (L x W x H)	230 x 100 x 64 mm
MAGNETIC FORCE	3000 kg
MOTOR POWER	1900 W
TOTAL POWER	2050 W
SPEED	(I) 42 - 110 min^{-1}
	(II) 65 - 190 min^{-1}
	(III) 140 - 400 min^{-1}
	(IV) 220 - 620 min^{-1}
SPINDLE	MC3 – 19,05 mm (¾") Weldon
AVAILABLE	110 - 120 and 220 - 240 Volt AC

ORDER CODE:

ECO.100/4

ACCESSORIES:

PAGE 42 - 57

STANDARD DELIVERY

ORDER CODE	DESCRIPTION	PAGES
KSP.Q	Coolant system (new model) with Quick Connect	44
IMC.30/19-N	Coolant Morse Taper 3 with 19,05 mm Weldon connection	44

ADDITIONAL PRODUCTS AVAILABLE

ORDER CODE	DESCRIPTION	PAGES
IBK.16	Drill Chuck ø 1,5 - 16 mm with B16 spindle connection	46
B16-MC3	Adaptor B16 - Morse Taper 3	46
IBQ.16	Quick Connect drill chuck 16 mm with B18 spindle connection	46
B18-MC3	Adaptor B18 - Morse Taper 3	46
MC.3	Morse Taper 3 with 19,05 mm Weldon connection	46
MCQ.30	Morse Taper 3 Quick Connect, suitable for Coolant system KSP.Q	44
MC.3/32	Morse Taper 3 - 31,75 mm Weldon for cutters ø 61-130mm	44
IMC.30/32-N	Coolant Morse Taper 3 - 31,75 mm Weldon suitable for coolant system KSP.Q (for cutters ø 61 - 100 mm)	44
HCS.KIT	Annular cutter set with 19,05 mm Weldon shank (2x ø 14 I 2x ø 18 I 2x ø 22 mm, including 1x pilot pin)	36
SSPI.06-14	Twist drills with 19,05 mm Weldon shank I ø 6 - 14 mm x 30 mm (Increasing by 1 mm increments)	38
SPI.06-14	Twist drills with 19,05 mm Weldon shank I ø 6 - 14 mm x 55 mm (Increasing by 1 mm increments)	38
TDS.200	HSS-Co (M35) Twist drill set (25 pieces, increasing by 0,5 mm increments)	40
SCE.25	Countersink drill ø 10 - 25 mm with 19,05 mm Weldon shank	38
SCE.40	Countersink drill ø 10 - 40 mm with 19,05 mm Weldon shank	38
SCE.50	Countersink drill ø 10 - 50 mm with 19,05 mm Weldon shank	38
Taps	Machine taps M3 - M30	54
GSW.512R	MT 2/3 Tapping chuck M5 -M12 reversible including rubber tap collets	56
GSW.820R	MT 3/4 Tapping chuck M8 - M20 reversible including rubber tap collets	56
GSW.830	MT 3 Tapping chuck M10 - M30	56

ECO.100/4 D

MAGNETIC DRILLING / THREADING MACHINE UP TO Ø 100 MM / M30 SWIVEL BASE

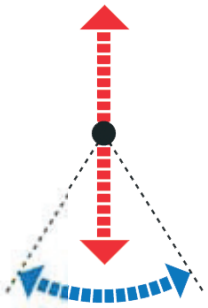

rotate 30° both ways and slide 15-20 mm forward and backwards.

Next to the unprecedentedly powerful motor, state-of-the-art electrically and mechanically adjustable torque and speed settings, the new 4-speed gear box the ECO.100/4 D has a swivel base. This means that the magnet is able to rotate 30° both ways and slide 15 - 20 mm forward and backwards.

ECO.100/4 D

TECHNICAL SPECIFICATIONS

ANNULAR CUTTERS	ø 12 - 100 mm
	ø 61 - 100 mm (MC3/32)
TWIST DRILLS	ø 1- 31,75 mm
COUNTERSINKING	ø 10 - 50 mm
THREADING	M3 - M30
LENGTH	365 mm
WIDTH	190 mm
HEIGHT	510 - 710 mm
STROKE	260 mm
WEIGHT	28 kg
MAGNET (L x W x H)	230 x 100 x 64 mm
MAGNETIC FORCE	3000 kg
MOTOR POWER	900 W
TOTAL POWER	2050 W
SPEED	(I) 42 - 110 min^{-1}
	(II) 65 - 190 min^{-1}
	(III) 140 - 400 min^{-1}
	(IV) 220 - 620 min^{-1}
SPINDLE	MC3 – 19,05 mm (¾") Weldon
AVAILABLE	110 - 120 and 220 - 240 Volt AC

ORDER CODE:

ECO.100/4 D

ACCESSORIES:

PAGE 42 - 57

STANDARD DELIVERY

ORDER CODE	DESCRIPTION	PAGE
KSP.Q	Coolant system (new model) with Quick Connect	44
IMC.30/19-N	Coolant Morse Taper 3 with 19,05 mm Weldon connection	44

ADDITIONAL PRODUCTS AVAILABLE

ORDER CODE	DESCRIPTION	PAGE
IBK.16	Drill Chuck ø 1,5 - 16 mm with B16 spindle connection	46
B16-MC3	Adaptor B16 - Morse Taper 3	46
IBQ.16	Quick Connect drill chuck 16 mm with B18 spindle connection	46
B18-MC3	Adaptor B18 - Morse Taper 3	46
MC.3	Morse Taper 3 with 19,05 mm Weldon connection	46
MCQ.30	Morse Taper 3 - 19,05 mm Quick Connect, suitable for Coolant system KSP.Q	44
MC.3/32	Morse Taper 3 - 31,75 mm Weldon for cutters ø 61-130mm	44
IMC.30/32-N	Coolant Morse Taper 3 - 31,75 mm Weldon suitable for coolant system KSP.Q (for cutters ø 61 - 100 mm)	44
HCS.KIT	Annular cutter set with 19,05 mm Weldon shank (2x ø 14 I 2x ø 18 I 2x ø 22 mm, including 1x pilot pin)	36
SSPI.06-14	Twist drills with 19,05 mm Weldon shank I ø 6 - 14 mm x 30 mm (Increasing by 1 mm increments)	38
SPI.06-14	Twist drills with 19,05 mm Weldon shank I ø 6 - 14 mm x 55 mm (Increasing by 1 mm increments)	38
TDS.200	HSS-Co (M35) Twist drill set (25 pieces, increasing by 0,5 mm increments)	40
SCE.25	Countersink drill ø 10 - 25 mm with 19,05 mm Weldon shank	38
SCE.40	Countersink drill ø 10 - 40 mm with 19,05 mm Weldon shank	38
SCE.50	Countersink drill ø 10 - 50 mm with 19,05 mm Weldon shank	38
Taps	Machine taps M3 - M30	54
GSW.512R	MT 2/3 Tapping chuck M5 -M12 reversible including rubber tap collets	56
GSW.820R	MT 3/4 Tapping chuck M8 - M20 reversible including rubber tap collets	56
GSW.830	MT 3 Tapping chuck M10 - M30	56

AIR.52/3

PNEUMATIC DRILLING MACHINE UP TO Ø 52 MM

The Air.52/3 is meant for metal working in hazardous areas such as the offshore and petrochemical industry, oil and gas extraction industry, power stations and the ship building and marine industry.

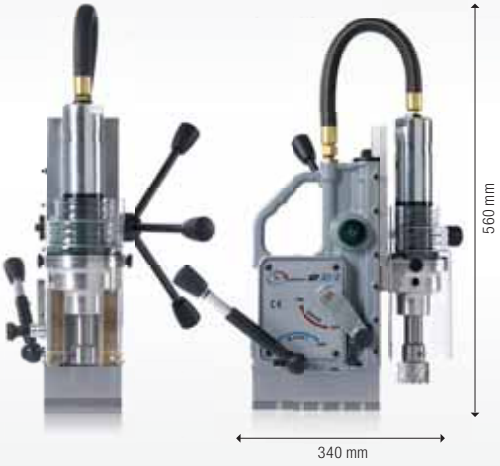

AIR.52/3

TECHNICAL SPECIFICATIONS

ANNULAR CUTTERS	ø 12 - 52 mm
LENGTH	340 mm
WIDTH	250 mm
HEIGTH	560 mm
STROKE	120 mm
WEIGHT	13 kg
MAGNET (L X W)	220 x 75 mm
MAGNETIC FORCE	1000 kg
SPEED	400 min-1
SPINDLE	Weldon 19,05 mm
AIR CONSUMPTION	0,9 m3/min
MIN.WORK. PRESSURE	6,3 bar (90 PSI)

ORDER CODE:

AIR.52/3

ACCESSORIES:

PAGE 42 - 57

STANDARD DELIVERY

ORDER CODE	DESCRIPTION	PAGE
A52.0001	Safety guard	

ADDITIONAL PRODUCTS AVAILABLE

ORDER CODE	DESCRIPTION	PAGE
HCS.KIT	Annular cutter set with 19,05 mm Weldon shank (2x ø 14 I 2x ø 18 I 2x ø 22 mm, including 1x pilot pin)	36

FEATURES:

- Dual air-powered motor system
- Automatic cooling system
- SAFE permanent magnet system
- Spark-free therefore explosion-proof
- Anti-static construction
- Weighs only 13 kg
- Safety interlock
- Reduced noise

EUROBOOR CATALOG 2012

Annular Cutters

HSS, HSS-Cobalt and TCT

Quality and safety have been the top priority at Euroboor for years. This is particularly the case when it comes to the production of Annular Cutters. Using superior-quality raw material, Euroboor Annular Cutters are manufactured of certified HSS steel. The production process is handled by high-tech CNC machines.

Control checks are conducted at the end of every production stage. The end product finally reaches the end control stage where standards are higher, as quality is only approved when it is consistent.

HSS steel does not become an Annular Cutter easily, especially not an Euroboor Annular Cutter. There is a whole world of difference. To obtain the maximum advantage from your magnetic drilling machine, you will naturally use Euroboor Annular Cutters. They offer the quickest drilling time, combined with a very long lifespan.

Range of Annular Cutters

At Euroboor you may choose from the largest selection of Annular Cutters, in both size and material as well as in metric and imperial sizes. For you may choose from HSS, HSS Cobalt alloy, and recently, Tungsten Carbide Tipped Annular Cutters with a 19,05 mm Weldon shank.

In this section of the Euroboor catalog 2012 you will find more information about Euroboor Annular Cutters.

Features:

- Perfect stable start
- Conical surface inside
- Precise centre pilot fitting
- Ground clamp surface
- Faster, because every tooth cuts
- More accurate
- Greater drill depth
- Stronger, therefore less fragile
- Guaranteed slug ejection

HSS Annular Cutters

HSS ANNULAR CUTTERS – DEPTH OF CUT 30 MM

EUROBOOR HSS ANNULAR CUTTERS WITH 19,05 MM WELDON SHANK - DOC 30 MM

Ø MM	ORDER CODE	Ø MM	ORDER CODE
12	HCS.120	41	HCS.410
13	HCS.130	42	HCS.420
14	HCS.140	43	HCS.430
15	HCS.150	44	HCS.440
16	HCS.160	45	HCS.450
17	HCS.170	46	HCS.460
18	HCS.180	47	HCS.470
19	HCS.190	48	HCS.480
20	HCS.200	49	HCS.490
21	HCS.210	50	HCS.500
22	HCS.220	51	HCS.510
23	HCS.230	52	HCS.520
24	HCS.240	53	HCS.530
25	HCS.250	54	HCS.540
26	HCS.260	55	HCS.550
27	HCS.270	56	HCS.560
28	HCS.280	57	HCS.570
29	HCS.290	58	HCS.580
30	HCS.300	59	HCS.590
31	HCS.310	60	HCS.600
32	HCS.320		
33	HCS.330		
34	HCS.340		
35	HCS.350		
36	HCS.360		
37	HCS.370		
38	HCS.380		
39	HCS.390		
40	HCS.400		

EUROBOOR HSS ANNULAR CUTTERS WITH 31,75 MM WELDON SHANK - DOC 30 MM

Ø MM	ORDER CODE	Ø MM	ORDER CODE
61	HCS.610	90	HCS.900
62	HCS.620	91	HCS.910
63	HCS.630	92	HCS.920
64	HCS.640	93	HCS.930
65	HCS.650	94	HCS.940
66	HCS.660	95	HCS.950
67	HCS.670	96	HCS.960
68	HCS.680	97	HCS.970
69	HCS.690	98	HCS.980
70	HCS.700	99	HCS.990
71	HCS.710	100	HCS.1000
72	HCS.720		
73	HCS.730		
74	HCS.740		
75	HCS.750		
76	HCS.760		
77	HCS.770		
78	HCS.780		
79	HCS.790		
80	HCS.800		
81	HCS.810		
82	HCS.820		
83	HCS.830		
84	HCS.840		
85	HCS.850		
86	HCS.860		
87	HCS.870		
88	HCS.880		
89	HCS.890		

HSS ANNULAR CUTTERS

Euroboor Annular Cutters are manufactured using superior-quality raw material. The cutters are appreciated worldwide for their optimum performance, durability and longer functional life. Being corrosion resistant, durable and non-abrasive, Euroboor Annular Cutters are widely used in the construction, oil and shipping industry as well as in different other industries.

Annular cutting

Cutting metal with Euroboor Annular Cutters is an efficient way to create holes of 12 mm (7/16") up to 130 mm (5") diameter. They come in cutting depths (DoC) 30 (1"), 55 (2"), 75 (3") and 110 (4") mm.

ACCESSORIES – PILOT PINS

ORDER CODE	LENGTH	DIAMETER	ANNULAR CUTTERS
IBC.70	77 mm	6,35 mm	HCS ø 12 up to 60 mm
IBC.80	103 mm	8 mm	HCS ø 61 up to 100 mm

HSS Annular Cutters

HSS ANNULAR CUTTERS – DEPTH OF CUT 55 MM

HSS ANNULAR CUTTERS

Multiple cutting teeth cut only the material around the periphery of the hole, leaving a solid metal slug. In fact, the wall thickness of the cutter is approximately 1/4", meaning that no matter what size hole you are cutting, you are only removing a minimum amount of material around the edge of the hole.

Because the cutting surface of annular cutters is spread out over multiple cutting teeth, they remain sharper for a longer period of time and can create 5 to 10 times more holes than traditional twist drills. Hole cutting with Annular Cutters requires no pre-drilling or step drilling. Holes are smooth and burr-free. No reaming is required.

EUROBOOR HSS ANNULAR CUTTERS WITH 19,05 MM WELDON SHANK - DOC 55 MM

Ø MM	ORDER CODE	Ø MM	ORDER CODE
12	HCL.120	41	HCL.410
13	HCL.130	42	HCL.420
14	HCL.140	43	HCL.430
15	HCL.150	44	HCL.440
16	HCL.160	45	HCL.450
17	HCL.170	46	HCL.460
18	HCL.180	47	HCL.470
19	HCL.190	48	HCL.480
20	HCL.200	49	HCL.490
21	HCL.210	50	HCL.500
22	HCL.220	51	HCL.510
23	HCL.230	52	HCL.520
24	HCL.240	53	HCL.530
25	HCL.250	54	HCL.540
26	HCL.260	55	HCL.550
27	HCL.270	56	HCL.560
28	HCL.280	57	HCL.570
29	HCL.290	58	HCL.580
30	HCL.300	59	HCL.590
31	HCL.310	60	HCL.600
32	HCL.320		
33	HCL.330		
34	HCL.340		
35	HCL.350		
36	HCL.360		
37	HCL.370		
38	HCL.380		
39	HCL.390		
40	HCL.400		

EUROBOOR HSS ANNULAR CUTTERS WITH 31,75 MM WELDON SHANK - DOC 55 MM

Ø MM	ORDER CODE	Ø MM	ORDER CODE
61	HCL.610	90	HCL.900
62	HCL.620	91	HCL.910
63	HCL.630	92	HCL.920
64	HCL.640	93	HCL.930
65	HCL.650	94	HCL.940
66	HCL.660	95	HCL.950
67	HCL.670	96	HCL.960
68	HCL.680	97	HCL.970
69	HCL.690	98	HCL.980
70	HCL.700	99	HCL.990
71	HCL.710	100	HCL.1000
72	HCL.720	105	HCL.1050
73	HCL.730	110	HCL.1100
74	HCL.740	115	HCL.1150
75	HCL.750	120	HCL.1200
76	HCL.760	125	HCL.1250
77	HCL.770	130	HCL.1300
78	HCL.780		
79	HCL.790		
80	HCL.800		
81	HCL.810		
82	HCL.820		
83	HCL.830		
84	HCL.840		
85	HCL.850		
86	HCL.860		
87	HCL.870		
88	HCL.880		
89	HCL.890		

ACCESSORIES – PILOT PINS

ORDER CODE	LENGTH	DIAMETER	ANNULAR CUTTERS
IBC.90	102 mm	6,35 mm	HCL ø 12 up to 60 mm
IBC.100	115 mm	8 mm	HCL ø 61 up to 130 mm

HSS Annular Cutters

HSS ANNULAR CUTTERS – DEPTH OF CUT 75 MM

EUROBOOR HSS ANNULAR CUTTERS
WITH 19,05 MM WELDON SHANK - DOC 75 MM

Ø MM	ORDER CODE	Ø MM	ORDER CODE
14	HCY.140	41	HCY.410
15	HCY.150	42	HCY.420
16	HCY.160	43	HCY.430
17	HCY.170	44	HCY.440
18	HCY.180	45	HCY.450
19	HCY.190	46	HCY.460
20	HCY.200	47	HCY.470
21	HCY.210	48	HCY.480
22	HCY.220	49	HCY.490
23	HCY.230	50	HCY.500
24	HCY.240		
25	HCY.250		
26	HCY.260		
27	HCY.270		
28	HCY.280		
29	HCY.290		
30	HCY.300		
31	HCY.310		
32	HCY.320		
33	HCY.330		
34	HCY.340		
35	HCY.350		
36	HCY.360		
37	HCY.370		
38	HCY.380		
39	HCY.390		
40	HCY.400		

ACCESSORIES – PILOT PINS

ORDER CODE	LENGTH	DIAMETER	ANNULAR CUTTERS
IBC.K25	125 mm	6,35 mm	HCY ø 14 up to 50 mm

HSS ANNULAR CUTTERS

HSS Annular Cutters, with unique geometry type and random-space tips, provide clearly cutting, fast feed rate, less vibration, smooth hole surface and long tool life, highly effective for drilling. They are better and quicker than twist drills.

HSS Annular Cutters can be used on all kinds of magnetic drilling machines. They can be widely used in drilling steel, copper, aluminum, stainless steel and plastic, in either plate or pipe form.

The HSS Annular Cutters have gained huge popularity in the market. The entire range is available in various specifications that can be customized as per clients' requirements.

HSS Annular Cutters

HSS ANNULAR CUTTERS– DEPTH OF CUT 100 MM

HSS ANNULAR CUTTERS

The Annular Cutter drills the hole in 3 steps:

1. The pilot pin accurately centers the cutter over the area to be drilled.
2. When drilling, the pilot pin retracts and allows the internal lubrication to reach the cutting teeth.
3. When the hole is complete, the slug is automatically ejected from the cutter, leaving an accurate, finished hole.

EUROBOOR HSS ANNULAR CUTTERS WITH 19,05 MM WELDON SHANK - DOC 100 MM

Ø MM	ORDER CODE	Ø MM	ORDER CODE
18	HCX.180	41	HCX.410
19	HCX.190	42	HCX.420
20	HCX.200	43	HCX.430
21	HCX.210	44	HCX.440
22	HCX.220	45	HCX.450
23	HCX.230	46	HCX.460
24	HCX.240	47	HCX.470
25	HCX.250	48	HCX.480
26	HCX.260	49	HCX.490
27	HCX.270	50	HCX.500
28	HCX.280	51	HCX.510
29	HCX.290	52	HCX.520
30	HCX.300	53	HCX.530
31	HCX.310	54	HCX.540
32	HCX.320	55	HCX.550
33	HCX.330	56	HCX.560
34	HCX.340	57	HCX.570
35	HCX.350	58	HCX.580
36	HCX.360	59	HCX.590
37	HCX.370	60	HCX.600
38	HCX.380		
39	HCX.390		
40	HCX.400		

EUROBOOR HSS ANNULAR CUTTERS WITH 31,75 MM WELDON SHANK - DOC 100 MM

Ø MM	ORDER CODE	Ø MM	ORDER CODE
61	HCX.610	90	HCX.900
62	HCX.620	91	HCX.910
63	HCX.630	92	HCX.920
64	HCX.640	93	HCX.930
65	HCX.650	94	HCX.940
66	HCX.660	95	HCX.950
67	HCX.670	96	HCX.960
68	HCX.680	97	HCX.970
69	HCX.690	98	HCX.980
70	HCX.700	99	HCX.990
71	HCX.710	100	HCX.1000
72	HCX.720		
73	HCX.730		
74	HCX.740		
75	HCX.750		
76	HCX.760		
77	HCX.770		
78	HCX.780		
79	HCX.790		
80	HCX.800		
81	HCX.810		
82	HCX.820		
83	HCX.830		
84	HCX.840		
85	HCX.850		
86	HCX.860		
87	HCX.870		
88	HCX.880		
89	HCX.890		

ACCESSORIES – PILOT PINS

ORDER CODE	LENGTH	DIAMETER	ANNULAR CUTTERS
IBC.K50	155 mm	6,35 mm	HCX ø 18 up to 60 mm
IBC.130	162 mm	8 mm	HCX ø 61 up to 100 mm

HSS-Co Annular Cutters

HSS-CO ANNULAR CUTTERS – DEPTH OF CUT 30 MM

EUROBOOR HSS-CO ANNULAR CUTTERS WITH 19,05 MM WELDON SHANK - DOC 30 MM

Ø MM	ORDER CODE	Ø MM	ORDER CODE
12	IBS.120	41	IBS.410
13	IBS.130	42	IBS.420
14	IBS.140	43	IBS.430
15	IBS.150	44	IBS.440
16	IBS.160	45	IBS.450
17	IBS.170	46	IBS.460
18	IBS.180	47	IBS.470
19	IBS.190	48	IBS.480
20	IBS.200	49	IBS.490
21	IBS.210	50	IBS.500
22	IBS.220	51	IBS.510
23	IBS.230	52	IBS.520
24	IBS.240	53	IBS.530
25	IBS.250	54	IBS.540
26	IBS.260	55	IBS.550
27	IBS.270	56	IBS.560
28	IBS.280	57	IBS.570
29	IBS.290	58	IBS.580
30	IBS.300	59	IBS.590
31	IBS.310	60	IBS.600
32	IBS.320		
33	IBS.330		
34	IBS.340		
35	IBS.350		
36	IBS.360		
37	IBS.370		
38	IBS.380		
39	IBS.390		
40	IBS.400		

EUROBOOR HSS-CO ANNULAR CUTTERS WITH 31,75 MM WELDON SHANK - DOC 30 MM

Ø MM	ORDER CODE	Ø MM	ORDER CODE
61	IBS.610	90	IBS.900
62	IBS.620	91	IBS.910
63	IBS.630	92	IBS.920
64	IBS.640	93	IBS.930
65	IBS.650	94	IBS.940
66	IBS.660	95	IBS.950
67	IBS.670	96	IBS.960
68	IBS.680	97	IBS.970
69	IBS.690	98	IBS.980
70	IBS.700	99	IBS.990
71	IBS.710	100	IBS.1000
72	IBS.720		
73	IBS.730		
74	IBS.740		
75	IBS.750		
76	IBS.760		
77	IBS.770		
78	IBS.780		
79	IBS.790		
80	IBS.800		
81	IBS.810		
82	IBS.820		
83	IBS.830		
84	IBS.840		
85	IBS.850		
86	IBS.860		
87	IBS.870		
88	IBS.880		
89	IBS.890		

HIGH SPEED STEEL COBALT ANNULAR CUTTERS

Euroboor HSS-Co Annular Cutters are made of Molybdenum-Chromium-Vanadium-Tungsten alloy High Speed Steel with an additional 8% Cobalt (M42).

The HSS-Co Annular Cutter is specifically designed to remain cool when cutting a hole. All flutes are fully ground, resulting in super-fast feed rates and smooth holes in hard materials, providing better chip clearance and higher cutting performances.

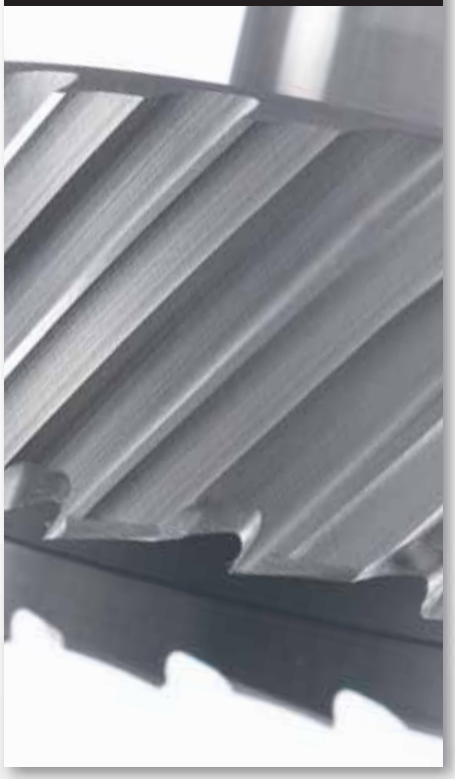

ACCESSORIES – PILOT PINS

ORDER CODE	LENGTH	DIAMETER	ANNULAR CUTTERS
IBC.70	77 mm	6,35 mm	IBS ø 12 up to 60 mm
IBC.80	103 mm	8 mm	IBS ø 61 up to 100 mm

EUROBOOR
FOR PROFESSIONALS BY PROFESSIONALS

HSS-Co Annular Cutters

HSS-CO ANNULAR CUTTERS – DEPTH OF CUT 55 MM

HIGH SPEED STEEL COBALT ANNULAR CUTTERS

M42 is a Molybdenum-Chromium-Vanadium-Tungsten High Speed Steel alloy with an additional 8% Cobalt.

The M42 HSS-Co Annular Cutter is widely used in the metalworking industry for its superior red hardness compared to more conventional high speed steels. This will lead to shorter cycle times in production environments due to higher cutting speeds.

EUROBOOR HSS-CO ANNULAR CUTTERS WITH 19,05 MM WELDON SHANK - DOC 55 MM

Ø MM	ORDER CODE	Ø MM	ORDER CODE
12	IBL.120	41	IBL.410
13	IBL.130	42	IBL.420
14	IBL.140	43	IBL.430
15	IBL.150	44	IBL.440
16	IBL.160	45	IBL.450
17	IBL.170	46	IBL.460
18	IBL.180	47	IBL.470
19	IBL.190	48	IBL.480
20	IBL.200	49	IBL.490
21	IBL.210	50	IBL.500
22	IBL.220	51	IBL.510
23	IBL.230	52	IBL.520
24	IBL.240	53	IBL.530
25	IBL.250	54	IBL.540
26	IBL.260	55	IBL.550
27	IBL.270	56	IBL.560
28	IBL.280	57	IBL.570
29	IBL.290	58	IBL.580
30	IBL.300	59	IBL.590
31	IBL.310	60	IBL.600
32	IBL.320		
33	IBL.330		
34	IBL.340		
35	IBL.350		
36	IBL.360		
37	IBL.370		
38	IBL.380		
39	IBL.390		
40	IBL.400		

EUROBOOR HSS-CO ANNULAR CUTTERS WITH 31,75 MM WELDON SHANK - DOC 55 MM

Ø MM	ORDER CODE	Ø MM	ORDER CODE
61	IBL.610	90	IBL.900
62	IBL.620	91	IBL.910
63	IBL.630	92	IBL.920
64	IBL.640	93	IBL.930
65	IBL.650	94	IBL.940
66	IBL.660	95	IBL.950
67	IBL.670	96	IBL.960
68	IBL.680	97	IBL.970
69	IBL.690	98	IBL.980
70	IBL.700	99	IBL.990
71	IBL.710	100	IBL.1000
72	IBL.720		
73	IBL.730		
74	IBL.740		
75	IBL.750		
76	IBL.760		
77	IBL.770		
78	IBL.780		
79	IBL.790		
80	IBL.800		
81	IBL.810		
82	IBL.820		
83	IBL.830		
84	IBL.840		
85	IBL.850		
86	IBL.860		
87	IBL.870		
88	IBL.880		
89	IBL.890		

ACCESSORIES – PILOT PINS

ORDER CODE	LENGTH	DIAMETER	ANNULAR CUTTERS
IBC.90	102 mm	6,35 mm	IBL ø 12 up to 60 mm
IBC.100	115 mm	8 mm	IBL ø 61 up to 100 mm

TCT ANNULAR CUTTERS

TCT ANNULAR CUTTERS – DEPTH OF CUT 30 MM

EUROBOOR TCT ANNULAR CUTTERS
WITH 19,05MM WELDON SHANK - DOC 35 MM

Ø MM	BESTELCODE	Ø MM	BESTELCODE
12	HMS.120	32	HMS.320
13	HMS.130	33	HMS.330
14	HMS.140	34	HMS.340
15	HMS.150	35	HMS.350
16	HMS.160	36	HMS.360
17	HMS.170	37	HMS.370
18	HMS.180	38	HMS.380
19	HMS.190	39	HMS.390
20	HMS.200	40	HMS.400
21	HMS.210	41	HMS.410
22	HMS.220	42	HMS.420
23	HMS.230	43	HMS.430
24	HMS.240	44	HMS.440
25	HMS.250	45	HMS.450
26	HMS.260	46	HMS.460
27	HMS.270	47	HMS.470
28	HMS.280	48	HMS.480
29	HMS.290	49	HMS.490
30	HMS.300	50	HMS.500
31	HMS.310		

TUNGSTEN CARBIDE TIPPED ANNULAR CUTTERS

Euroboor Tungsten Carbide Tipped Annular Cutters are suitable for drilling difficult materials such as stainless steel, copper and aluminum. The Tungsten Carbide Tipped Cutters consist of an alloy metal body and tungsten carbide cutting teeth. The latter can be sharpened or replaced.

Euroboor Tungsten Carbide Tipped Annular Cutters are among the very best cutters. These top-quality Annular Cutters are available with cutting depths up to 55 mm and diameters up to ø 130 mm.

ACCESSORIES – PILOT PINS

ORDER CODE	LENGTH	DIAMETER	ANNULAR CUTTERS
HMS			
IBC.75	87 mm	6,35 mm	HMS ø 12 up to 17 mm
IBC.85	90 mm	8 mm	HMS ø 18 up to 50 mm

TCT ANNULAR CUTTERS

TCT ANNULAR CUTTERS – DEPTH OF CUT 55 MM

TUNGSTEN CARBIDE TIPPED ANNULAR CUTTERS

Euroboor Tungsten Carbide Tipped Annular Cutters are equipped with a spiral flute which creates optimum chip removal and seizure is virtually impossible.

These annular cutters are used e.g. in hardened materials such as HARDOX steel, stainless steels and high tensile strength such as railway tracks. For the latter the Rail drilling machine has been developed especially for this purpose.

The Tungsten Carbide Tipped teeth of the cutter can be sharpened or replaced. Because of the above composition, and when used in a proper way, these cutters are less susceptible to breakage than standard High Speed Steel Cutters, especially in larger diameters and lengths.

EUROBOOR TCT ANNULAR CUTTERS WITH 19,05 MM WELDON SHANK - DOC 50 MM

Ø MM	ORDER CODE	Ø MM	ORDER CODE
12	-	41	HML.410
13	-	42	HML.420
14	HML.140	43	HML.430
15	HML.150	44	HML.440
16	HML.160	45	HML.450
17	HML.170	46	HML.460
18	HML.180	47	HML.470
19	HML.190	48	HML.480
20	HML.200	49	HML.490
21	HML.210	50	HML.500
22	HML.220	51	HML.510
23	HML.230	52	HML.520
24	HML.240	53	HML.530
25	HML.250	54	HML.540
26	HML.260	55	HML.550
27	HML.270	56	HML.560
28	HML.280	57	HML.570
29	HML.290	58	HML.580
30	HML.300	59	HML.590
31	HML.310	60	HML.600
32	HML.320		
33	HML.330		
34	HML.340		
35	HML.350		
36	HML.360		
37	HML.370		
38	HML.380		
39	HML.390		
40	HML.400		

EUROBOOR TCT ANNULAR CUTTERS WITH 31,75 MM WELDON SHANK - DOC 50 MM

Ø MM	ORDER CODE	Ø MM	ORDER CODE
61	HML.610	90	HML.900
62	HML.620	91	HML.910
63	HML.630	92	HML.920
64	HML.640	93	HML.930
65	HML.650	94	HML.940
66	HML.660	95	HML.950
67	HML.670	96	HML.960
68	HML.680	97	HML.970
69	HML.690	98	HML.980
70	HML.700	99	HML.990
71	HML.710	100	HML.1000
72	HML.720	105	HML.1050
73	HML.730	110	HML.1100
74	HML.740	115	HML.1150
75	HML.750	120	HML.1200
76	HML.760	125	HML.1250
77	HML.770	130	HML.1300
78	HML.780		
79	HML.790		
80	HML.800		
81	HML.810		
82	HML.820		
83	HML.830		
84	HML.840		
85	HML.850		
86	HML.860		
87	HML.870		
88	HML.880		
89	HML.890		

ACCESSORIES – PILOT PINS

ORDER CODE	LENGTH	DIAMETER	ANNULAR CUTTERS
IBC.90	102 mm	6,35 mm	HML ø 14 up to 17 mm
IBC.80	103 mm	8 mm	HML ø 18 up to 25 mm
IBC.100	115 mm	8 mm	HML ø 26 up to 130 mm

HSS Annular Cutter & Twist Drill Sets

DEPTH OF CUT 30 AND 55 MM

HCS.KIT

ORDER CODE	DESCRIPTION
HCS.Kit	Annular Cutter set with 19,05 mm Weldon shank HSS quality / depth of cut 30 mm 6 pieces in sizes: 2x ø 14 I 2x ø 18 I 2x ø 22 mm, including 1 pilot pin

HCS.KIT/8

ORDER CODE	DESCRIPTION HCS.KIT/8	DESCRIPTION HCS.KIT/9
HCS.Kit/8	Annular Cutter set with 19,05 mm Weldon shank - Inch - 8 or 9 pieces	
	HSS quality / depth of cut 30 or 55 mm	
	2x ø 9/16” x 30 mm	1x ø 9/16” x 30 mm
	2x ø 11/16” x 30 mm	1x ø 9/16” x 55 mm
	2x ø 13/16” x 30 mm	1x ø 11/16” x 30 mm
	1x pilot pin	1x ø 11/16” x 55 mm
		1x ø 13/16” x 30 mm
		1x ø 13/16” x 55 mm
		2x pilot pins

HCS.KIT/10

ORDER CODE	DESCRIPTION
HCS.KIT/10	HCS Annular Cutter set with 19,05 mm Weldon shank Set of 10 cutters and 1 pilot pin, sizes: ø 12 I ø 14 I ø 16 I ø 18 I ø 20 I ø 22 I ø 24 I ø 26 I ø 28 I ø 30 mm

TCT.KIT

ORDER CODE	DESCRIPTION
TCT.KIT	TCT Annular Cutter set with 19,05 mm Weldon shank Set of 6 cutters and 2 pilot pins, sizes: ø 14 I ø 16 I ø 18 I ø 20 I ø 21 I ø 22 mm

Pilot pins

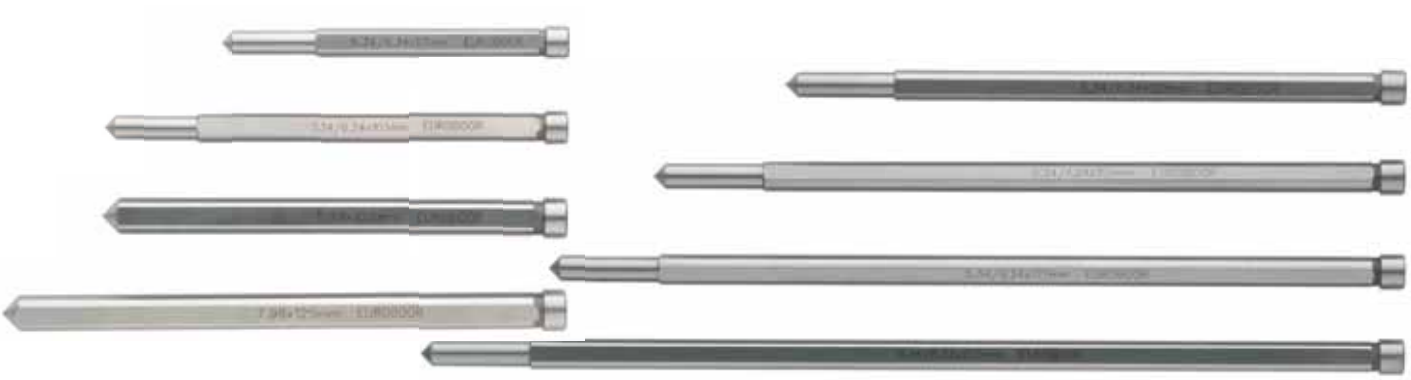

PILOT PINS			
ORDER CODE	LENGTH	DIAMETER	TO BE USED TOGETHER WITH ANNULAR CUTTERS
IBC.70	77 mm	6,35 mm	HCS and IBS ø 12 up to 60 mm
IBC.75	87 mm	6,35 mm	HMS cutters ø 12 up to 17 mm and all sizes TRCS drills
IBC.80	103 mm	8 mm	HCS and IBS cutters ø 61 up to 130 mm HML cutters ø 18 up to 25 mm
IBC.85	90 mm	8 mm	HMS cutters ø 18 up to 50 mm
IBC.90	102 mm	6,35 mm	HCL and IBL cutters ø 12 up to 60 mm HML cutters ø 14 up to 17 mm
IBC.100	115 mm	8 mm	HCL and IBL cutters ø 61 up to 130 mm HML cutters ø 26 up to 130 mm (extra long for better centering of cutter)
IBC.110	162 mm	6,35 mm	Combination HMS cutters ø 12 up to 17 mm + IBK.NIT or IBK.QFN adaptors Combination TRCS + IBK.NIT or IBK.QFN adaptors
IBC.130	162 mm	8 mm	HCX cutters ø 61 - 100 mm
IBC.K25	125 mm	6,35 mm	HCY cutters ø 14 up to 50 mm Combination HCL cutters ø 12 up to 60 mm + IBK.NIT or IBK.QFN adaptors Combination HCL cutters ø 12 up to 60 mm + Extension adaptor 25 mm
IBC.K50	155 mm	6,35 mm	HCX cutters ø 18 up to 60 mm Combination HCL cutters ø 12 up to 60 mm + Extension adaptor 50 mm
IBC.K75	177 mm	6,35 mm	Combination HCL cutters ø 12 up to 60 mm + Extension adaptor 75 mm
IBC.K100	203 mm	6,35 mm	Combination HCL cutters ø 12 up to 60 mm +Extension adaptor 100 mm

Twist drills

TWIST DRILLS WITH 19,05 MM WELDON SHANK
COUNTERSINK DRILLS WITH 19,05 MM WELDON SHANK

TWIST DRILLS 30 MM — 19,05 MM WELDON SHANK (GROUP 125)

ORDER CODE	DESCRIPTION	
SSPI.06	HSS Twist drill	ø 6 x 30 mm
SSPI.07	HSS Twist drill	ø 7 x 30 mm
SSPI.08	HSS Twist drill	ø 8 x 30 mm
SSPI.09	HSS Twist drill	ø 9 x 30 mm
SSPI.10	HSS Twist drill	ø 10 x 30 mm
SSPI.11	HSS Twist drill	ø 11 x 30 mm
SSPI.12	HSS Twist drill	ø 12 x 30 mm
SSPI.13	HSS Twist drill	ø 13 x 30 mm
SSPI.14	HSS Twist drill	ø 14 x 30 mm

TWIST DRILLS 55 MM — 19,05 MM WELDON SHANK (GROUP 125)

ORDER CODE	DESCRIPTION	
SPI.06	HSS Twist drill	ø 6 x 55 mm
SPI.07	HSS Twist drill	ø 7 x 55 mm
SPI.08	HSS Twist drill	ø 8 x 55 mm
SPI.09	HSS Twist drill	ø 9 x 55 mm
SPI.10	HSS Twist drill	ø 10 x 55 mm
SPI.11	HSS Twist drill	ø 11 x 55 mm
SPI.12	HSS Twist drill	ø 12 x 55 mm
SPI.13	HSS Twist drill	ø 13 x 55 mm

COUNTERSINK DRILLS — 19,05 MM WELDON SHANK (GROUP 150)

ORDER CODE	DESCRIPTION
SCE.25	HSS Countersink drill ø 10 - 25 mm - 19,05 mm Weldon shank
SCE.40	HSS Countersink drill ø 10 - 40 mm - 19,05 mm Weldon shank
SCE.50	HSS Countersink drill ø 10 - 50 mm - 19,05 mm Weldon shank

Twist drills

HSS-CO TWIST DRILLS

TWIST DRILLS (GROUP 164)

ORDER CODE	DESCRIPTION:	SIZE:	
TDCO.010	HSS-Co Twist drill	ø 1 mm	(per 50 pieces)
TDCO.015	HSS-Co Twist drill	ø 1,5 mm	(per 50 pieces)
TDCO.020	HSS-Co Twist drill	ø 2 mm	(per 50 pieces)
TDCO.025	HSS-Co Twist drill	ø 2,5 mm	(per 50 pieces)
TDCO.030	HSS-Co Twist drill	ø 3 mm	(per 50 pieces)
TDCO.035	HSS-Co Twist drill	ø 3,5 mm	(per 50 pieces)
TDCO.040	HSS-Co Twist drill	ø 4 mm	(per 50 pieces)
TDCO.045	HSS-Co Twist drill	ø 4,5 mm	(per 50 pieces)
TDCO.050	HSS-Co Twist drill	ø 5 mm	(per 50 pieces)
TDCO.055	HSS-Co Twist drill	ø 5,5 mm	(per 50 pieces)
TDCO.060	HSS-Co Twist drill	ø 6 mm	(per 25 pieces)
TDCO.065	HSS-Co Twist drill	ø 6,5 mm	(per 25 pieces)
TDCO.070	HSS-Co Twist drill	ø 7 mm	(per 25 pieces)
TDCO.075	HSS-Co Twist drill	ø 7,5 mm	(per 25 pieces)
TDCO.080	HSS-Co Twist drill	ø 8 mm	(per 10 pieces)
TDCO.085	HSS-Co Twist drill	ø 8,5 mm	(per 10 pieces)
TDCO.090	HSS-Co Twist drill	ø 9 mm	(per 10 pieces)
TDCO.095	HSS-Co Twist drill	ø 9,5 mm	(per 10 pieces)
TDCO.100	HSS-Co Twist drill	ø 10 mm	(per 10 pieces)
TDCO.105	HSS-Co Twist drill	ø 10,5 mm	(per 10 pieces)
TDCO.110	HSS-Co Twist drill	ø 11 mm	(per 10 pieces)
TDCO.115	HSS-Co Twist drill	ø 11,5 mm	(per 10 pieces)
TDCO.120	HSS-Co Twist drill	ø 12 mm	(per 10 pieces)
TDCO.125	HSS-Co Twist drill	ø 12,5 mm	(per 10 pieces)
TDCO.130	HSS-Co Twist drill	ø 13 mm	(per 10 pieces)

DRILL BIT SETS

VARIOUS SETS

TWIST DRILL SET

ORDER CODE	DESCRIPTION:
TDS.200	Twist drill set HSS-Co M35 quality. Suitable for every drill chuck 25 drills ø 1 - 13 mm - Increasing by 0,5 mm increments, DIN338

STEPPED DRILL SET

ORDER CODE	DESCRIPTION:
ESS.430/2	Stepped drill set HSS quality with TiN (Titanium Nitride) coating Spiral flute for easy chip removal 3 pieces sizes ø 6 - 30 I ø 4 - 20 I ø 4 - 12 mm

TWIST DRILL AND TAPPING SET

ORDER CODE	DESCRIPTION:
DTS.312	Twist drill and tapping set (14 pieces) HSS-Co machine taps M35 - Vaporized (Steam tempered) Machine tap sizes: M3, M4, M5, M6, M8, M10 and M12 Twist drill sizes: ø 2,5 I ø 3,3 I ø 4,2 I ø 5,5 I ø 6,8 I ø 8,5 I ø 10,2 mm

COUNTERSINK DRILL SET

ORDER CODE	DESCRIPTION:
CBS.620	Countersink drill set HSS-Cobalt M35 quality - 3 cutting edges 90° 6 pieces Drill sizes: ø 6,3 I ø 8,3 I ø 10,4 I ø 12,4 I ø 16,6 I ø 20,5 mm

EUROBOOR
FOR PROFESSIONALS BY PROFESSIONALS

EUROBOOR CATALOG 2012

ACCESSORIES

We believe accessories are auxiliary tools. Their development follows from practical situations in which problems present themselves; problems which usually could have been prevented by properly estimating the diversity and complexity of the work.

After almost 35 years of practical experience we dare say we are familiar with most problems that may occur. The Euroboor accessories have been developed for direct practical solutions and comfort at work. Non-magnetic basis, horizontal drilling, or for lack of space... you may proceed undisrupted at all times.

This section of the Euroboor catalog 2012 provides an extensive collection of useful and necessary accessories, tuned to your activities. The Euroboor accessories guarantee professional solutions.

Accessories

COOLANT SYSTEM / MORSE TAPERS

COOLANT SYSTEM (GROUP 80)

ORDER CODE	DESCRIPTION
KSP.Q	Coolant system (new model) with Quick Connect
020.0145	Coolant ring Quick Connect
	Compatible for ECO.32, ECO.32-T and ECO.40/2

MORSE TAPERS (GROUP 90)

ORDER CODE	DESCRIPTION
MC.2	Adaptor Morse Taper 2 - 19,05 mm (¾") Weldon
MC.3	Adaptor Morse Taper 3 - 19,05 mm (¾") Weldon
MC.4	Adaptor Morse Taper 4 - 19,05 mm (¾") Weldon
MC.3/32	Adaptor Morse Taper 3 - 31,75 mm (1-¼") Weldon
MC.4/32	Adaptor Morse Taper 4 - 31,75 mm (1-¼") Weldon
IMC.20	Adaptor Morse Taper 2 - 19,05 mm (¾") Weldon Compatible with Auto Coolant system (KSP.Q)
IMC.30/19-N	Adaptor Morse Taper 3 - 19,05 mm (¾") Weldon Compatible with Auto Coolant system (KSP.Q)
IMC.30/32-N	Adaptor Morse Taper 3 - 31,75 mm (1-¼") Weldon Compatible with Auto Coolant system (KSP.Q)
IMC.40/N	Adaptor Morse Taper 4 - 31,75 mm (1-¼") Weldon Compatible with Auto Coolant system (KSP.Q)
MCQ.20	Adaptor Morse Taper 2 Quick Connect - 19,05 mm (¾") Weldon Compatible with Auto Coolant system (KSP.Q)
MCQ.30	Adaptor Morse Taper 3 Quick Connect - 19,05 mm (¾") Weldon Compatible with Auto Coolant system (KSP.Q)
020.0116Q	Spindle ½"x 20 UNF - 19,05 mm Weldon Quick Connect

Accessories

EXTENSION ADAPTORS / POWER ASSISTS

EXTENSION (ADAPTORS) (GROUP 145)

ORDER CODE	DESCRIPTION
IBK.25	Adaptor 19,05 mm (3/4") Weldon (externally) - 19,05 mm (3/4") Weldon (internally) extension 25 mm for 6,35 mm / 1/4" pilot pins
IBK.50	Adaptor 19,05 mm (3/4") Weldon (externally) - 19,05 mm (3/4") Weldon (internally) extension 50 mm for 6,35 mm / 1/4" pilot pins
IBK.75	Adaptor 19,05 mm (3/4") Weldon (externally) - 19,05 mm (3/4") Weldon (internally) extension 75 mm for 6,35 mm / 1/4" pilot pins
IBK.100	Adaptor 19,05 mm (3/4") Weldon (externally) - 19,05 mm (3/4") Weldon (internally) extension 100 mm for 6,35 mm / 1/4" pilot pins
MC.2x2T265	Extension sleeve MT.2 - MT.2 (90 mm)
MC.3x3T265	Extension sleeve MT.3 - MT.3 (121 mm)
MC.3x3T268	Extension sleeve MT3x3 type268 (250mm)
MC.3x3T268/2	Extension sleeve MT3x3 type 268 (450mm)
020.0116/300	Extension sleeve 300mm

POWER ASSISTS (GROUP 110)

ORDER CODE	DESCRIPTION
020.0330	Power Assist for ECO.32 up to ECO.50-T
020.0336	Power Assist for ECO.80 up to ECO.130
020.0063	Capstan hub with ratchet mechanism for ECO.32, ECO.32-T, ECO.40/2, ECO.50 and ECO.50-T

Accessories

DRILL CHUCKS/ADAPTORS

DRILL CHUCKS

(GROUP 75)

ORDER CODE	DESCRIPTION
IBK.13	Drill chuck ø 1,5 - 13 mm ½" x 20 UNF thread (inner)
IBK.13-B16	Drill chuck ø 1,5 - 13 mm with B16 connection
IBQ.16	Drill chuck Quick Connect ø 1,5 - 16 mm with B18 connection
IBK.16	Drill chuck ø 1,5 - 16 mm with B18 connection

ADAPTORS

(GROUP 75)

B16-MC2	Adaptor B16 - Morse Taper 2
B16-MC3	Adaptor B16 - Morse Taper 3
B18-MC2	Adaptor B18 - Morse Taper 2
B18-MC3	Adaptor B18 - Morse Taper 3

Accessories

WELDON ADAPTORS / PIPE ADAPTOR KIT

WELDON ADAPTORS (GROUP 60)

ORDER CODE	DESCRIPTION
IBK.NIT	Adaptor Nitto One Touch (externally) - 19 mm Weldon internally
IBK.QFN	Adaptor Fein Quick IN (externally) - 19 mm Weldon internally
IBK.14	Adaptor 19,05 mm Weldon (externally) 1/2” x 20 UNF (externally)
IBK.15	Adaptor 19,05 mm Weldon (externally) 1/2” x 20 UNF (externally)
IBK.16-14	Adaptor 19,05 mm Weldon (externally) - B16 Drill chuck connection
IBK.16-14-N	Adaptor Nitto One Touch - B16 Drill chuck connection
IBK.16-14-FQ	Adaptor Fein Quick In - B16 Drill chuck connection

PIPE ADAPTOR KIT (GROUP 95)

PAK.100

PAK.200

ORDER CODE	DESCRIPTION
PAK.100	Pipe adaptor kit for magnet max. 175 x 85 mm and max. pipe ø 80 - 250 mm
PAK.200	Pipe adaptor kit for magnet max. 230 x 110 mm and max. pipe ø 150 - 500 mm
PAK.EXT	Extension chain 2,5 meter

Accessories

MACHINE CARRYING CASES

MACHINE CASES (GROUP 165)

ORDER CODE	DESCRIPTION
CAS.100/2	ABS machine carrying case for ECO.32, ECO.32-T, ECO.40/2, ECO.50 and ECO.50-T
CAS.100/6	ABS machine trolley for ECO.80/4 and ECO.100/4
CAS.200/3	Metal case for LKF.200

Accessories

VACUUM ADAPTOR KIT / PERSONAL SAFETY EQUIPMENT / MEASURING TOOLS

VACUUM ADAPTOR KIT (GROUP 07)

ORDER CODE	DESCRIPTION
VAC.810	Vacuum adaptor kit ø 300 mm, including pump
VAC.820	Vacuum adaptor kit oval (clamp system with 2 suction pads) including pump

PERSONAL SAFETY EQUIPMENT (GROUP 70)

ORDER CODE	DESCRIPTION
SAF.100	Safety goggles
SAF.200	Earplugs
SAF.300	Safety gloves, pig split / cotton, standard EN 388

MEASURING TOOLS (GROUP 85)

ORDER CODE	DESCRIPTION
PRM 02	Measuring tape (5 meter)
EDS.150	Digital caliper (150 mm length)

Accessories

OTHER ACCESSORIES

OTHER ACCESSORIES (GROUP 39)

ORDER CODE	DESCRIPTION
MAGICSTICK	Magnetic rod for cleaning up metal chips, etc.

Accessories

CUTTING OIL

COOLING AND CUTTING OIL

Euroboor provides the best cooling, lubricating and cutting oils, developed especially for the metal cutting industry.

In cooperation with one of the world's best known oil manufacturers we developed several high-quality drill, tap and cutting oils. Across the globe thousands of professionals in the metal sector prefer Euroboor oil products over any other manufacturer.

In fact, our cooling, lubricating and cutting oils are exported to the Middle East. Not an insignificant detail.

Using the right cutting oil is vital for your tools. The choice is easy: Euroboor coolants, lubricants and cutting oils.

CUTTING OIL (GROUP 01)

ORDER CODE	CONTENT	PACKAGING
Oil cans		
IBO.1001	1 liter	12 x 1 liter
IBO.1050	5 liter	4 x 5 liter
IBO.1060	60 liter	1 x 60 liter
IBO.1210	208 liter	1 x 208 liter
IBO.2001	1 liter	12 x 1 liter
IBO.2050	5 liter	4 x 5 liter
IBO.2060	60 liter	1 x 60 liter
IBO.2200	208 liter	1 x 208 liter
IBO.5001	1 liter	12 x 1 liter
IBO.5050	5 liter	4 x 5 liter
IBO.5060	60 liter	1 x 60 liter
IBO.5210	208 liter	1 x 208 liter
MV.4001	1 liter	12 x 1 liter
MV.4050	5 liter	4 x 5 liter
MV.4060	60 liter	1 x 60 liter
Spray can		
IBO-P.911	400 ml	12 x 400 ml
Cutting paste		
IBP.50/2	1 kilogram	1 x 1 kilogram

EUROBOOR CATALOG 2012

TAPPING TOOLS

Machine taps

Euroboor offers an extensive range of standard taps in HSS-Co and HSS-Co Ox material, DIN and ISO design in straight point and spiral flute.
In this section of the Euroboor catalog 2012 you will find more detailed information about our machine taps, tap holders and tapping chucks.

Steam tempered / Vaporised
Steam tempered or Vaporized is a special short water vapour treatment used to create a thin corrosion film. The resulting surface is treated in a special oil bath. This helps create a blue-black layer on the tool which in the first place offers better rust protection and in the second place can hold on to the lubrication. Any tensions during the process, developed in the grinding phase, are removed entirely during this treatment.

Because as a result of this the so-called cold welding is reduced during the cutting process the metal cutting operation and the tool life of the cutting tool is improved significantly.

Accessories

MACHINE TAPS

WHITE RING	Steam tempered for use in abrasive short chipping applications, such as cast iron and stainless steel	**DIN371/376**
GREEN RING	For tough non - ferrous metals such as aluminum, zinc, lead, copper, brass and plastic	**DIN371/376**

MACHINE TAPS — THROUGH HOLES — (GROUP 140)

ORDER CODE	DESCRIPTION	THROUGH HOLES	SURFACE	DIN
910.030C	Tap M3 HSS-Co	Straight point green ring	Blank	DIN371
910.040C	Tap M4 HSS-Co	Straight point green ring	Blank	DIN371
910.050C	Tap M5 HSS-Co	Straight point green ring	Blank	DIN371
910.060C	Tap M6 HSS-Co	Straight point green ring	Blank	DIN371
910.080C	Tap M8 HSS-Co	Straight point green ring	Blank	DIN371
910.100C	Tap M10 HSS-Co	Straight point green ring	Blank	DIN371
900.100C	Tap M10 HSS-Co	Straight point green ring	Blank	DIN376
900.120C	Tap M12 HSS-Co	Straight point green ring	Blank	DIN376
900.140C	Tap M14 HSS-Co	Straight point green ring	Blank	DIN376
900.160C	Tap M16 HSS-Co	Straight point green ring	Blank	DIN376
900.180C	Tap M18 HSS-Co	Straight point green ring	Blank	DIN376
900.200C	Tap M20 HSS-Co	Straight point green ring	Blank	DIN376
900.220C	Tap M22 HSS-Co	Straight point green ring	Blank	DIN376
900.240C	Tap M24 HSS-Co	Straight point green ring	Blank	DIN376
900.270C	Tap M27 HSS-Co	Straight point green ring	Blank	DIN376
900.300C	Tap M30 HSS-Co	Straight point green ring	Blank	DIN376

ORDER CODE	DESCRIPTION	THROUGH HOLES	SURFACE	DIN
910.030V	Tap M3 HSS-Co Ox	Straight point white ring	Vaporized	DIN371
910.040V	Tap M4 HSS-Co Ox	Straight point white ring	Vaporized	DIN371
910.050V	Tap M5 HSS-Co Ox	Straight point white ring	Vaporized	DIN371
910.060V	Tap M6 HSS-Co Ox	Straight point white ring	Vaporized	DIN371
910.080V	Tap M8 HSS-Co Ox	Straight point white ring	Vaporized	DIN371
910.100V	Tap M10 HSS-Co Ox	Straight point white ring	Vaporized	DIN371
900.100V	Tap M10 HSS-Co Ox	Straight point white ring	Vaporized	DIN376
900.120V	Tap M12 HSS-Co Ox	Straight point white ring	Vaporized	DIN376
900.140V	Tap M14 HSS-Co Ox	Straight point white ring	Vaporized	DIN376
900.160V	Tap M16 HSS-Co Ox	Straight point white ring	Vaporized	DIN376
900.180V	Tap M18 HSS-Co Ox	Straight point white ring	Vaporized	DIN376
900.200V	Tap M20 HSS-Co Ox	Straight point white ring	Vaporized	DIN376
900.220V	Tap M22 HSS-Co Ox	Straight point white ring	Vaporized	DIN376
900.240V	Tap M24 HSS-Co Ox	Straight point white ring	Vaporized	DIN376
900.270V	Tap M27 HSS-Co Ox	Straight point white ring	Vaporized	DIN376
900.300V	Tap M30 HSS-Co Ox	Straight point white ring	Vaporized	DIN376

MACHINE TAPS | BLIND HOLES | (GROUP 140)

ORDER CODE	DESCRIPTION	BLIND HOLES	SURFACE	DIN
910.031C	Tap M3 HSS-Co	Spiral flute green ring	Blank	DIN371
910.041C	Tap M4 HSS-Co	Spiral flute green ring	Blank	DIN371
910.051C	Tap M5 HSS-Co	Spiral flute green ring	Blank	DIN371
910.061C	Tap M6 HSS-Co	Spiral flute green ring	Blank	DIN371
910.081C	Tap M8 HSS-Co	Spiral flute green ring	Blank	DIN371
910.101C	Tap M10 HSS-Co	Spiral flute green ring	Blank	DIN371
900.121C	Tap M12 HSS-Co	Spiral flute green ring	Blank	DIN376
900.141C	Tap M14 HSs-Co	Spiral flute green ring	Blank	DIN376
900.161C	Tap M16 HSS-Co	Spiral flute green ring	Blank	DIN376
900.181C	Tap M18 HSS-Co	Spiral flute green ring	Blank	DIN376
900.201C	Tap M20 HSS-Co	Spiral flute green ring	Blank	DIN376
900.221C	Tap M22 HSS-Co	Spiral flute green ring	Blank	DIN376
900.241C	Tap M24 HSS-Co	Spiral flute green ring	Blank	DIN376
900.271C	Tap M27 HSS-Co	Spiral flute green ring	Blank	DIN376
900.301C	Tap M30 HSS-Co	Spiral flute green ring	Blank	DIN376

ORDER CODE	DESCRIPTION	BLIND HOLES	SURFACE	DIN
910.031V	Tap M3 HSS-Co Ox	Spiral flute white ring	Vaporized	DIN371
910.041V	Tap M4 HSS-Co Ox	Spiral flute white ring	Vaporized	DIN371
910.051V	Tap M5 HSS-Co Ox	Spiral flute white ring	Vaporized	DIN371
910.061V	Tap M6 HSS-Co Ox	Spiral flute white ring	Vaporized	DIN371
910.081V	Tap M8 HSS-Co Ox	Spiral flute white ring	Vaporized	DIN371
910.101V	Tap M10 HSS-Co Ox	Spiral flute white ring	Vaporized	DIN371
900.101V	Tap M10 HSS-Co Ox	Spiral flute white ring	Vaporized	DIN376
900.121V	Tap M12 HSS-Co Ox	Spiral flute white ring	Vaporized	DIN376
900.141V	Tap M14 HSS-Co Ox	Spiral flute white ring	Vaporized	DIN376
900.161V	Tap M16 HSS-Co Ox	Spiral flute white ring	Vaporized	DIN376
900.181V	Tap M18 HSS-Co Ox	Spiral flute white ring	Vaporized	DIN376
900.201V	Tap M20 HSS-Co Ox	Spiral flute white ring	Vaporized	DIN376
900.221V	Tap M22 HSS-Co Ox	Spiral flute white ring	Vaporized	DIN376
900.241V	Tap M24 HSS-Co Ox	Spiral flute white ring	Vaporized	DIN376
900.271V	Tap M27 HSS-Co Ox	Spiral flute white ring	Vaporized	DIN376
900.301V	Tap M30 HSS-Co Ox	Spiral flute white ring	Vaporized	DIN376

Accessories

TAP COLLETS

TAP COLLETS (GROUP 135)

ORDER CODE	DESCRIPTION
GSW.512R	Tapping chuck M5-M12 MC.2-3 Reversible including rubber clamps
GSW.820R	Tapping chuck M8-M20 MC.3-4 Reversible including rubber clamps
GSW.830	Tapping chuck M10-M30
VSP.160	Rubber clamp suitable for GSW.830 (ø 9,0 - 16,0 mm)
VSP.230	Rubber clamp suitable for GSW.830 (ø 16,0 - 23,0 mm)

Accessories

TAP HOLDER / TAPPING KIT

TAP HOLDER (GROUP 130)

ORDER CODE	DESCRIPTION				DIN/ISO
TCM.08D376	Tap holder	M8	ø	6 mm	DIN376
TCM.10D376	Tap holder	M10	ø	7 mm	DIN376
TCM.12D376	Tap holder	M12	ø	9 mm	DIN376
TCM.14D376	Tap holder	M14	ø	11 mm	DIN376
TCM.16D376	Tap holder	M16	ø	12 mm	DIN376
TCM.18D376	Tap holder	M18	ø	14 mm	DIN376
TCM.20D376	Tap holder	M20	ø	16 mm	DIN376
TCM.22D376	Tap holder	M22-24	ø	18 mm	DIN376
TCM.08I529	Tap holder	M8	ø	8 mm	ISO529
TCM.10I529	Tap holder	M10	ø	10 mm	ISO529
TCM.12I529	Tap holder	M12	ø	9 mm	ISO529
TCM.14I529	Tap holder	M14	ø	11,2 mm	ISO529
TCM.16I529	Tap holder	M16	ø	12,5 mm	ISO529
TCM.18I529	Tap holder	M18	ø	14 mm	ISO529
TCM.20I529	Tap holder	M20	ø	14 mm	ISO529
TCM.22I529	Tap holder	M22	ø	16 mm	ISO529
TCM.24I529	Tap holder	M24	ø	18 mm	ISO529

WHITE RING Steam tempered for use in abrasive short chipping applications, such as cast iron and stainless steel **DIN371/376**

GREEN RING For tough non - ferrous metals such as aluminum, zinc, lead, copper, brass and plastic **DIN371/376**

TAPPING KIT — THROUGH HOLES (GROUP 164)

ORDER CODE	DESCRIPTION
TSM.330	Tapping kit HSS-Co M35 quality Machine taps M3 - M30 DIN371/376 Tap holders M8 - M30

BEVELING MACHINES

LKF.200

Thanks to the double roller guide the machine glides without a problem over the material. With a weight of only 22 kg the LKF.200 is easily manageable.

The milling angle is adjustable from 15° to 60° and the depth is incrementally variable and accurately adjustable. The LKF.200 has a maximum bevel width of 20 mm. The edges are perfectly formed and need no extra finishing.

The LKF.200 processes profiles, plates and pipes (from ø 160 mm) with the greatest of ease. The LKF.200 is suitable for mild steel. The motor is provided with an electronic overload safety and a restart feature. The LKF.200 also features a compressed air connection which provides additional cooling when used intensively.

LKF.450/2

LKF.450/2 machine is perfectly suited for making welding angles, to countersink drilled holes and to deburr material. The Euroboor beveling machine weighs a mere 4.7 kg, making it very user-friendly and the ergonomic grip keeps it well handled.

Thanks to the variable adjustable speed, this machine is not only suitable for regular steel, but also for materials such as aluminum. It is driven by a powerful 1100W motor, which is equipped with a 'soft-start' feature.

LKF.450/2 machines come standard with a 45° milling head, including 2 high-quality cutting plates which can be used on 3 sides by repositioning them. You can upgrade your machine with both 30° and radius 2.5 milling heads. Cutting depth is accurate and continuously variable adjustable.

LKF.200

BEVELING MACHINE

Thanks to the double roller guide the machine glides effortlessly over the material. At only 22 kg the LKF.200 is easily manageable. The LKF.200 processes profiles, plates and pipes (from ø 160 mm) with the greatest ease. The LKF.200 is suitable for mild steel.

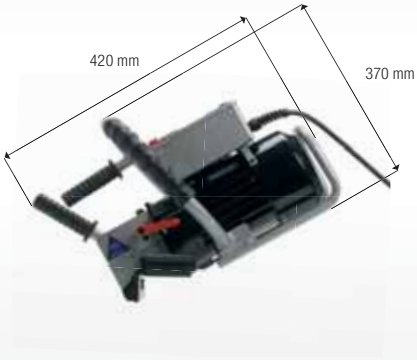

LKF.200 BEVELING MACHINE

TECHNICAL SPECIFICATIONS

MOTOR POWER	1100 Watt
RPM	2850
EDGE ANGLE	15° - 60°
BEVEL WIDTH	0 - 20 mm
DIMENSIONS	420 x 300 x 300 mm
WEIGHT	22 kg
VOLTAGE	110V/220V

ORDER CODE:

LKF.200

ACCESSORIES:

PAGE 64

STANDARD DELIVERY

ORDER CODE	DESCRIPTION	PAGE
LKS.10-G	Carbide cutting plates rounded angles (12 pieces)	64
Toolkit	Tools to change milling head and cutting plates	

ADDITIONAL PRODUCTS AVAILABLE

ORDER CODE	DESCRIPTION	PAGE
LKS.10	Carbide cutting plates rounded angles suitable for LKF.200 (packaging 10 pieces)	64
LKS.10-G	Carbide cutting plates MKII (Sharp edges) suitable for LKF.200 (packaging 10 pieces)	64
LKS.10-R	Carbide cutting plates (TiAlN coated) with 90° angles suitable for LKF.200 (packaging 10 pieces)	64
LKS.10-T	Carbide cutting plates (TiAlN coated), Vaporized with rounded angles suitable for LKF.200 (packaging 10 pieces)	64
LKF.225	Pipe milling aid for LKF.200	64

SUPPLIED COMPLETE WITH STEEL CASE INCLUDING:

- Two milling heads
- 1 set of assembly tools (Toolkit)
- 1 manual

LKF.450/2

BEVELING MACHINE

The LKF.450/2 machine is perfectly suited for making welding angles, to countersink drilled holes and deburr material. Thanks to the variable adjustable speed, this machine is not only suitable for regular steel. It is driven by a powerful 1100W motor, which is equipped with a ‘soft-start’ feature.

LKF.450/2 BEVELING MACHINE

TECHNICAL SPECIFICATIONS

MOTOR POWER	1100 Watt
RPM	3000 - 6000
EDGE ANGLE	30°, 45°, Radius-2,5
BEVEL WIDTH 30° EDGE	0 - 5 mm
BEVEL WIDTH 45° EDGE	0 - 6 mm
DIMENSIONS	265 x 125 x 305 mm
WEIGHT	4,7 kg
VOLTAGE	110V/220V

ORDER CODE:

LKF.450/2

ACCESSORIES:

PAGES 64 - 65

STANDARD DELIVERY

ORDER CODE	DESCRIPTION	PAGE
LKS.20	Carbide cutting plates suitable for LKF.450/2 (2 pieces)	64
Milling head	Milling head 30° or 45° or R-2,5	65

ADDITIONAL PRODUCTS AVAILABLE

ORDER CODE	DESCRIPTION	PAGE
LKS.20	Carbide cutting plates suitable for LKF.450/2 (packaging 10 pieces)	64
LKS.20-R	Carbide cutting plates R2,5 suitable for LKF.450/2 (packaging 10 pieces)	64
LKF.1201	Milling head 30°	65
LKF.1202	Milling head 45°	65
LKF.1203	Milling head R-2,5	65

COMPLETE DELIVERY:

- Machine LKF.450/2
- 1 Milling head including 2 cutting plates
- Key SW 22
- Plastic case
- User manual

Accessories

BEVELING ACCESSORIES

ACCESSORIES LKF.200 - LKF.450/2 (GROUP 55)

ORDER CODE	DESCRIPTION
LKS.10	Carbide cutting plates with rounded angles suitable for LKF.200 (packaging 10 pieces)
LKS.10-G	Carbide cutting plates MKII with sharp angles suitable for LKF.200 (packaging 10 pieces)
LKS.10-R	Carbide cutting plates (TiAlN coated) with 90° sharp angles suitable for LKF.200 (packaging 10 pieces)
LKS.10-T	Carbide cutting plates (TiAlN coated), black with rounded angles suitable for LKF.200 (packaging 10 pieces)
LKF.225	Pipe bevel accessory
LKS.20	Carbide cutting plates suitable for LKF.450/2 (packaging 10 pieces)
LKS.20-R	Carbide cutting plates R2,5 suitable for LKF.450/2 (packaging 10 pieces)

Beveling Accessories

MILLING HEADS

ACCESSORIES LKF.450/2 (GROUP 55)

ORDER CODE	DESCRIPTION
LKF.1201	Milling head 30° suitable for LKF.450/2
LKF.1202	Milling head 45° suitable for LKF.450/2
LKF.1203	Milling head R-2,5 suitable for LKF.450/2

Accessories

ROTARY BURRS

FEATURES

Tungsten Carbide Burrs

Manufacturing process: CNC Fully ground

Coating: Bright, TIALN

D1 mm	Diameter of head
L2 mm	Length of head
D2 mm	Diameter of shank
L1 mm	Total length

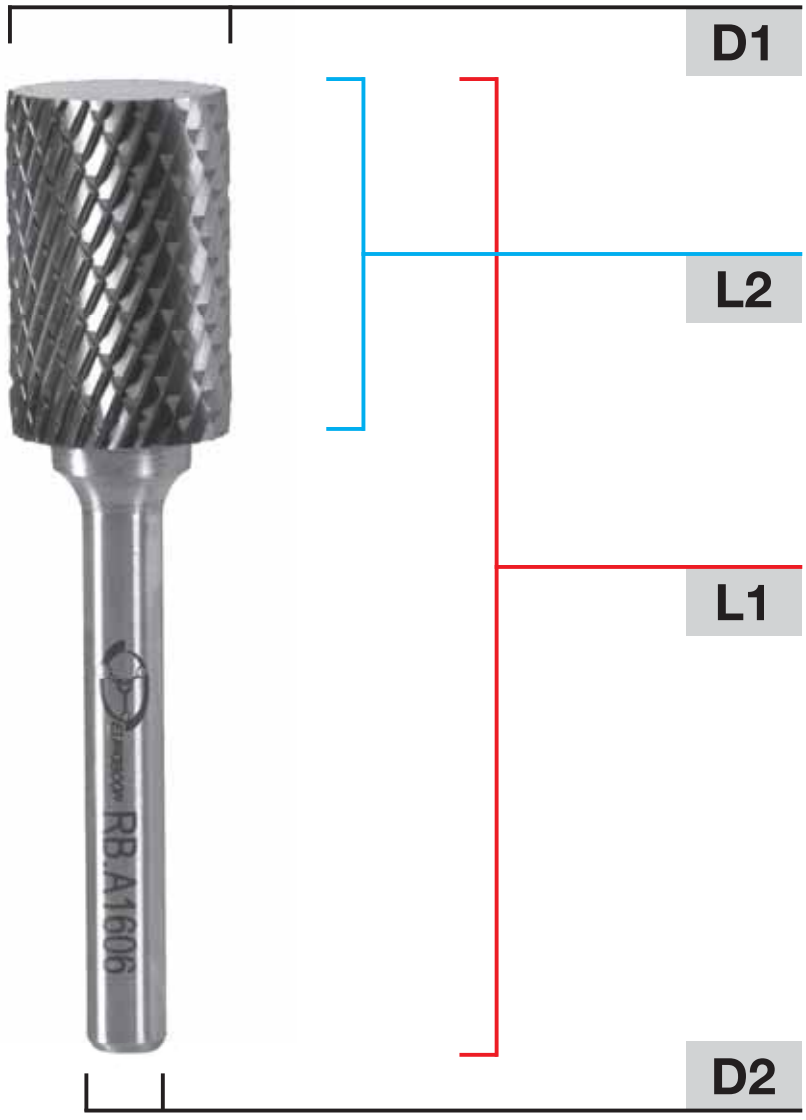

ROTARY BURRS

TYPE A CYLINDER - WITHOUT END CUT (GROUP 34)

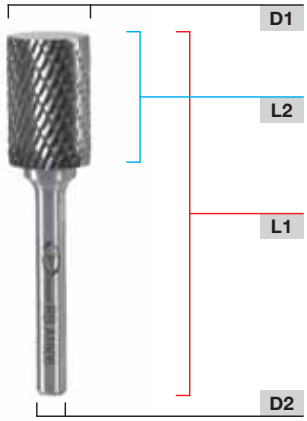

ORDER CODE	D1 Ø MM	L2 MM	D2 Ø MM	L1 MM	
RB.A0303	3	13	3	38,5	Universal
RB.A0606	6	16	6	61	Universal
RB.A0806	8	20	6	65	Universal
RB.A1006	10	20	6	65	Universal
RB.A1206	12	25	6	70	Universal
RB.A1606	16	25	6	70	Universal
RBD.A0806	8	20	6	65	Diamond
RBD.A1006	10	20	6	65	Diamond
RBD.A1206	12	25	6	70	Diamond
RBD.A1606	16	25	6	70	Diamond

ROTARY BURRS

TYPE B CYLINDER - WITH END CUT (GROUP 34)

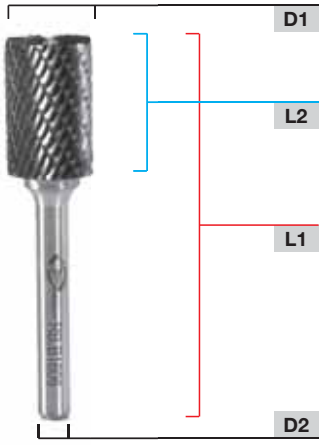

ORDER CODE	D1 Ø MM	L2 MM	D2 Ø MM	L1 MM	
RB.B0303	3	16	3	38,5	Universal
RB.B0606	6	13	6	61	Universal
RB.B0806	8	20	6	65	Universal
RB.B1006	9,5	20	6	65	Universal
RB.B1206	12	25	6	70	Universal
RB.B1606	16	25	6	70	Universal
RBD.B0806	8	20	6	65	Diamond
RBD.B1006	9,5	20	6	65	Diamond
RBD.B1206	12	25	6	70	Diamond
RBD.B1606	16	25	6	70	Diamond

ROTARY BURRS

TYPE C - BALL NOSED CYLINDER (GROUP 34)

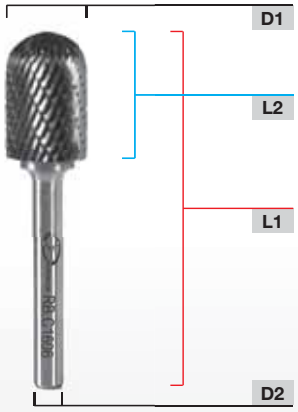

ORDER CODE	D1 Ø MM	L2 MM	D2 Ø MM	L1 MM	
RB.C0303	3	13	3	38,5	Universal
RB.C0606	6	16	6	61	Universal
RB.C0806	8	20	6	65	Universal
RB.C1006	9,5	20	6	65	Universal
RB.C1206	12	25	6	70	Universal
RB.C1606	16	25	6	70	Universal
RBD.C0806	8	20	6	65	Diamond
RBD.C1006	9,5	20	6	65	Diamond
RBD.C1206	12	25	6	70	Diamond
RBD.C1606	16	25	6	70	Diamond

Accessories

ROTARY BURRS

ROTARY BURRS

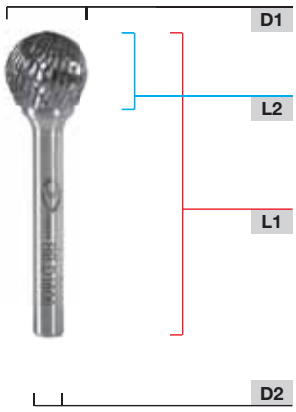

TYPE D - BALL (GROUP 34)

ORDER CODE	D1 Ø MM	L2 MM	D2 Ø MM	L1 MM	
RB.D0303	3	2,7	3	38,5	Universal
RB.D0606	6	5,4	6	61	Universal
RB.D0806	8	7,2	6	65	Universal
RB.D1006	9,5	9	6	65	Universal
RB.D1206	12	10,8	6	70	Universal
RB.D1606	16	14,4	6	70	Universal
RBD.D0806	8	7,2	6	65	Diamond
RBD.D1006	9,5	9	6	65	Diamond
RBD.D1206	12	10,8	6	70	Diamond
RBD.D1606	16	14,4	6	70	Diamond

ROTARY BURRS

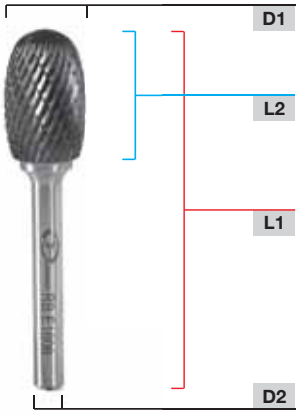

TYPE E - OVAL (GROUP 34)

ORDER CODE	D1 Ø MM	L2 MM	D2 Ø MM	L1 MM	
RB.E0303	3	7	3	38,5	Universal
RB.E0606	6	10	6	55	Universal
RB.E0806	8	13	6	58	Universal
RB.E1006	10	16	6	61	Universal
RB.E1206	12	20	6	65	Universal
RB.E1606	16	25	6	70	Universal
RBD.E0806	8	13	6	58	Diamond
RBD.E1006	10	16	6	61	Diamond
RBD.E1206	12	20	6	65	Diamond
RBD.E1606	16	25	6	70	Diamond

ROTARY BURRS

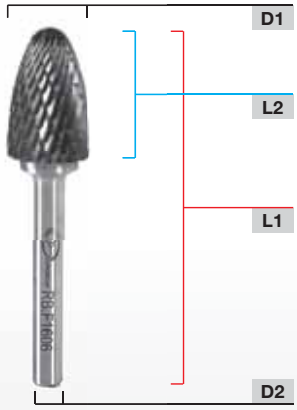

TYPE F - BALL NOSED TREE (GROUP 34)

ORDER CODE	D1 Ø MM	L2 MM	D2 Ø MM	L1 MM	
RB.F0303	3	13	3	38,5	Universal
RB.F0606	6	18	6	63	Universal
RB.F0806	8	20	6	65	Universal
RB.F1006	10	20	6	65	Universal
RB.F1206	12	25	6	70	Universal
RB.F1606	16	25	6	70	Universal
RBD.F0806	8	20	6	65	Diamond
RBD.F1006	10	20	6	65	Diamond
RBD.F1206	12	25	6	70	Diamond
RBD.F1606	16	25	6	70	Diamond

ROTARY BURRS

TYPE G - ARC POINTED TREE (GROUP 34)

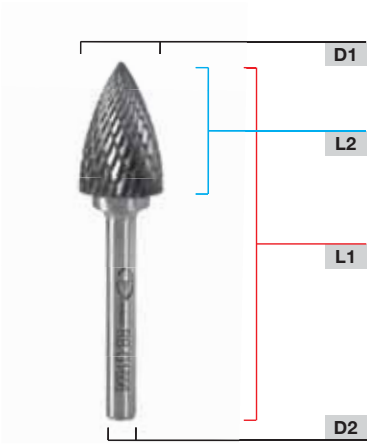

ORDER CODE	D1 Ø MM	L2 MM	D2 Ø MM	L1 MM	
RB.G0303	3	13	3	38,5	Universal
RB.G0606	6	18	6	63	Universal
RB.G0806	8	20	6	65	Universal
RB.G1006	9,5	20	6	65	Universal
RB.G1206	12	25	6	70	Universal
RB.G1606	16	25	6	70	Universal
RBD.G0806	8	20	6	65	Diamond
RBD.G1006	9,5	20	6	65	Diamond
RBD.G1206	12	25	6	70	Diamond
RBD.G1606	16	25	6	70	Diamond

ROTARY BURRS

TYPE H - FLAME (GROUP 34)

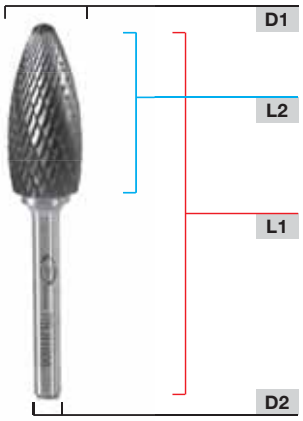

ORDER CODE	D1 Ø MM	L2 MM	D2 Ø MM	L1 MM	
RB.H0303	3	13	3	38,5	Universal
RB.H0606	6	18	6	63	Universal
RB.H0806	8	20	6	65	Universal
RB.H1006	9,5	20	6	70	Universal
RB.H1206	12	25	6	77	Universal
RB.H1606	16	25	6	81	Universal
RBD.H0806	8	20	6	65	Diamond
RBD.H1006	9,5	20	6	70	Diamond
RBD.H1206	12	25	6	77	Diamond
RBD.H1606	16	25	6	81	Diamond

ROTARY BURRS

TYPE J – 60 DEGREE CONE (GROUP 34)

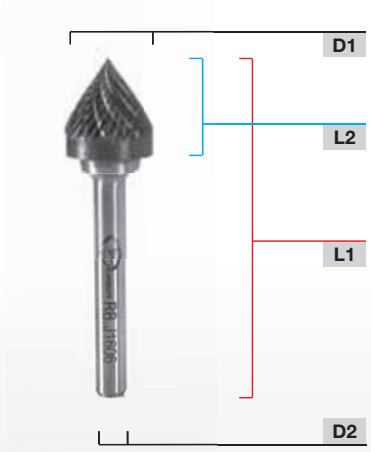

ORDER CODE	D1 Ø MM	L2 MM	D2 Ø MM	L1 MM	
RB.J0606	6	5,2	6,5	50	Universal
RB.J1006	10	8,7	6	53	Universal
RB.J1206	12	10,4	6	55	Universal
RB.J1606	16	13,8	6	58	Universal
RBD.J1006	10	8,7	6	53	Diamond
RBD.J1206	12	10,4	6	55	Diamond
RBD.J1606	16	13,8	6	58	Diamond

Accessories

ROTARY BURRS

ROTARY BURRS

TYPE K – 90 DEGREE CONE (GROUP 34)

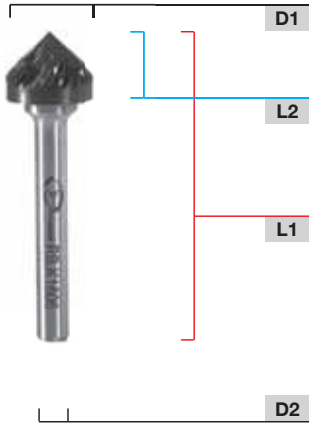

ORDER CODE	D1 Ø MM	L2 MM	D2 Ø MM	L1 MM	
RB.K0606	6	16	6	61	Universal
RB.K1006	10	25	6	70	Universal
RB.K1206	12	28	6	73	Universal
RB.K1606	16	33	6	78	Universal
RBD.K1206	12	28	6	73	Diamond
RBD.K1606	16	33	6	78	Diamond

ROTARY BURRS

TYPE L - BALL NOSED CONE (GROUP 34)

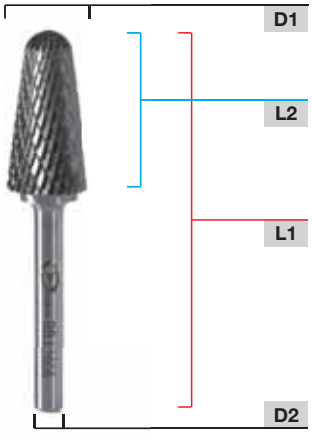

ORDER CODE	D1 Ø MM	L2 MM	D2 Ø MM	L1 MM	
RB.L0303	3	13	3	38,5	Universal
RB.L0606	6	18	6	61	Universal
RB.L0806	8	22	6	65	Universal
RB.L1006	10	25	6	70	Universal
RB.L1206	12	28	6	73	Universal
RB.L1606	16	33	6	78	Universal
RBD.L0806	8	22	6	65	Diamond
RBD.L1006	10	25	6	70	Diamond
RBD.L1206	12	28	k6	73	Diamond
RBD.L1606	16	33	6	78	Diamond

ROTARY BURRS

TYPE M - CONE (GROUP 34)

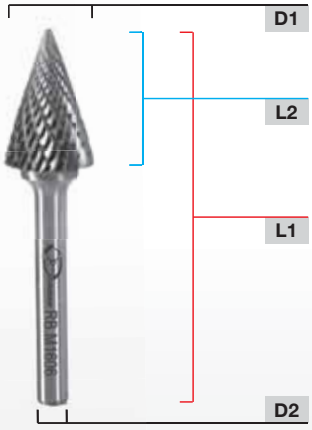

ORDER CODE	D1 Ø MM	L2 MM	D2 Ø MM	L1 MM	
RB.M0303	3	13	3	38,5	Universal
RB.M0606	6	18	6	63	Universal
RB.M0806	8	20	6	65	Universal
RB.M1006	10	20	6	65	Universal
RB.M1206	12	25	6	70	Universal
RB.M1606	16	25	6	70	Universal
RBD.M0806	8	20	6	65	Diamond
RBD.M1006	10	20	6	65	Diamond
RBD.M1206	12	25	6	70	Diamond
RBD.M1606	16	25	6	70	Diamond

ROTARY BURRS

TYPE N – INVERTED CONE (GROUP 34)

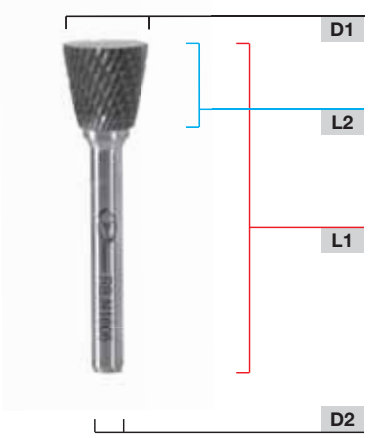

ORDER CODE	D1 Ø MM	L2 MM	D2 Ø MM	L1 MM	
RB.N0303	3	13	3	38,5	Universal
RB.N0606	6	17	6	52	Universal
RB.N1006	10	10	6	55	Universal
RB.N1206	12	13	6	58	Universal
RB.N1606	16	16	6	61	Universal
RBD.N1006	10	10	6	55	Diamond
RBD.N1206	12	13	6	58	Diamond

ROTARY BURRS (GROUP 34)

ORDER CODE	DESCRIPTION	
RBS.105	Tungsten Carbide rotary burrs set (5 pieces K30)	
	Double action teeth, shaft ø 6 mm	
	SA3M 9,5 x 19 mm	cylinder without end cut
	SB3M 9,5 x 19 mm	cylinder with end cut
	SC3M 12,5 x 25 mm	ball nosed cylinder
	SF3M 9,5 x 19 mm	ball nosed tree
	SL3M 9,5 x 25 mm	ball nosed cone

ROTARY BURRS (GROUP 34)

ORDER CODE	DESCRIPTION	
RBS.110	Tungsten Carbide rotary burrs set (10 pieces K30)	
	Double action teeth, shaft ø 6 mm	
	SA3M 9,5 x 19 mm	cylinder without end cut
	SC3M 9,5 x 19 mm	ball nosed cylinder
	SD3M 9,5 x 8 mm	ball
	SE3M 9,5 x 16 mm	oval
	SF3M 9,5 x 19 mm	ball nosed tree
	SG3M 9,5 x 19 mm	arc pointed tree
	SJ3M 9,5 x 8 mm	60 degree cone
	SL3M 9,5 x 27 mm	ball nosed cone (8/14°)
	SM3M 9,5 x 16 mm	cone
	SN3M 9,5 x 9,5 mm	inverted cone

BLADERUNNER
BLADERUNNER

BLADERUNNER

Effortlessly sawing at high speed through all sorts of materials such as steel, stainless steel, aluminum and copper. Wood and plastic are not a problem either to the Bladerunner. Plates, profiles or pipes; the Bladerunner makes short work of everything it gets its teeth into. Showers of sparks belong almost to the past.

Chips are automatically caught in the integrated chip collector and therefore the surroundings remain clean. The Bladerunners are lightweight and ergonomically designed. The result; easily manageable, extremely precise and accurate working.
All Bladerunners are equipped with a variable angle setting. Because of this the range of possibilities is even more extensive. Think for example about sawing bevelling edges. All Bladerunner machines are not only efficient but safe and durable as well.

All Bladerunner saw blades are provided with 'Omni-cutting technique'. One saw blade enables you to cut steel, stainless steel or aluminum. Imagine the comfort and cost savings this system offers you!

Sawing Machines

BLADERUNNER EHC.230/2V

EHC.230/2V - CIRCULAR SAWING MACHINE

TECHNICAL SPECIFICATIONS

VOLTAGE	220-240V/50HZ
RPM	0 - 2600 (MIN^{-1}) IDLE
	VARIABLE-SPEED
MOTOR POWER	1700 W
ANGLE ADJUSTMENT	0 - 45 °
BORE SIZE	Ø 20 MM & 25,4 MM
MAX. SAW DEPTH	90° - 82 MM (TUBES)
	45° - 56 MM
WEIGHT	7,1 KG
MAX. CONTINUOUS USE	30 MINUTES
MAX. Ø SAW BLADE	230 MM
CUT-OFF CAPACITY	3-13 MM
	LENGTH 6 MM

ORDER CODE:

EHC.230/2V

ACCESSORIES:

PAGE 78

ACCESSORIES - SAW BLADES

ORDER CODE	DESCRIPTION
230.0003	Saw blade ø 230 mm, 48 teeth, bore size 25,4 mm

Sawing Machines

BLADERUNNER EHC.230/3

EHC.230/3 - CIRCULAR SAWING MACHINE

TECHNICAL SPECIFICATIONS

VOLTAGE	220-240V/50HZ
RPM	2700 (MIN⁻¹) IDLE
MOTOR POWER	1800 W
ANGLE ADJUSTMENT	0 - 45 °
BORE SIZE	Ø 25,4 MM
MAX. SAW DEPTH	90° - 82,5 MM (TUBES)
	45° - 58 MM
WEIGHT	8,9 KG
MAX. CONTINUOUS USE	30 MINUTES
MAX. Ø SAW BLADE	230 MM
CUT-OFF CAPACITY	3-13 MM
	LENGTH 6 MM
BUILT-IN	LASER INDICATOR

ORDER CODE:

EHC.230/3

ACCESSORIES:

PAGE 78

ACCESSORIES - SAW BLADES

ORDER CODE	DESCRIPTION
230.0003	Saw blade ø 230 mm, 48 teeth, bore size 25,4 mm

Sawing Machines

EDC.140 – CUT-OFF SAWING MACHINE

EDC.140 – CUT-OFF SAWING MACHINE

TECHNICAL SPECIFICATIONS

CAPACITY	2200 Watt
VOLTAGE	220V/50hz
WEIGHT	24 kg
RPM	1300 (MIN-1) IDLE
SAW BLADE	14" (355 mm)
ANGLE ADJUSTMENT	0 - 45 º
RANGE AT 45º	Pipe: max. ø 105 mm, Square: 90 x 90 (110) mm
RANGE AT 90º	Pipe: max. ø 130 mm, Square 120 x 120 (185) mm
DIMENSIONS	540 x 290 x 410 mm

ORDER CODE:

EDC.140

ACCESSORIES:

PAGE 78

ACCESSORIES – SAW BLADES

ORDER CODE	DESCRIPTION		
130.355	Saw blade ø 355 mm	72 teeth	bore size 25,4 mm
130.355/80	Saw blade ø 355 mm	80 teeth	bore size 25,4 mm

Sawing Machines

EBS.400 - BANDSAW MACHINE

EBS.400 - BANDSAW MACHINE

TECHNICAL SPECIFICATIONS

CAPACITY	370 Watt
VOLTAGE	220V
WEIGHT	27 kg
ANGLE ADJUSTMENT	0 - 45 º (left)
SAWING SPEED	45 M/min
RANGE AT 45º	square 100 x 60 mm
RANGE AT 90º	pipe max. ø 100 mm, square 100 x 150 mm
RPM	1430 min-1
SAW BAND	1470 x 13 x 0,65 mm
DIMENSIONS	710 x 370 x 450 mm
AUTOMATIC SHUT-OFF	By means of micro-switch

ORDER CODE:

EBS.400

ACCESSORIES:

PAGE 78

ACCESSORIES – BAND SAW BLADES		(GROUP 65)
ORDER CODE	DESCRIPTION	PACKAGING
400.0001	EBS.400 band saw	5 pieces
EBS.400-T	Frame compatible with EBS.400	

Accessories

CIRCLE SAW BLADES / BANDSAWS

CIRCLE SAW BLADES (GROUP 160)

ORDER CODE	DESCRIPTION		
185.0370	Saw blade ø 180 mm	36 teeth	bore size 20 mm
200.0001	Saw blade ø 200 mm	48 teeth	bore size 25,4 mm
230.0003	Saw blade ø 230 mm	48 teeth	bore size 25,4 mm
230.0003	Saw blade ø 230 mm	48 teeth	bore size 25,4 mm
130.355	Saw blade ø 355 mm	72 teeth	bore size 25,4 mm
130.355/80	Saw blade ø 355 mm	80 teeth	bore size 25,4 mm

BANDSAW (GROUP 65)

ORDER CODE	DESCRIPTION	QUANTITY
EBS.0001	EBS.100 band saw (price per piece, packaging 10 pieces)	10 pieces
400.0001	EBS.400 band saw (price per piece, packaging 5 pieces)	5 pieces

OTHER ACCESSORIES (GROUP 39)

ORDER CODE	DESCRIPTION
EBS.400-T	Table for EBS.400

EUROBOOR

FOR PROFESSIONALS BY PROFESSIONALS

Addendum to CATALOG **2012**

Magnetic Drilling Machines

EBM.360 – CORDLESS MAGNETIC DRILLING MACHINE

EBM.360	
TECHNICAL SPECIFICATIONS	
ANNULAR CUTTERS	ø 12 - 36 mm
LENGTH	297 mm
WIDTH	112 mm
HEIGHT	416 mm
STROKE	230 mm
WEIGHT	14 kg
MAGNET	160x80x42 mm
ELECTROMAGNET	1500 kg
BATTERY	37 V / 7 Ah Li-Ion
CHARGE TIME	60 minutes
SPEED	(I) 775 min^{-1}
SPINDLE	19,05 mm Weldon
BATTERY CHARGER	110-120 and 220-240 V AC
ORDER CODE:	
EBM.360	

Mobility guaranteed! The Euroboor Battery Operated Magnetic Drilling Machine EBM.360 has a unique electro magnet making its world premiere. This agile, compact and light weight CORDLESS machine offers your absolute freedom of movement.

It's hardworking and smart as well, with battery life LED-indicators to work safely. The patented EBM.360 rapidly slices through material up to 2'' thick and is loaded with useful and award winning features. The powerful enhanced motor is designed to squeeze every ounce of performance from the strong Lithium-Ion power pack.

EUROBOOR
FOR PROFESSIONALS BY PROFESSIONALS

Cutter sharpening machine

ERM.100/2

ERM.100/2	
TECHNICAL SPECIFICATIONS	
LENGTH	410 mm
WIDTH	410 mm
HEIGHT	390 mm
MOTOR POWER	120 W
VOLTAGE	220-240 V
WEIGHT	28 kg
NOISE LEVEL	< 70 dBa
GRINDING WHEEL	ø 125 mm
BORE SIZE	10 mm
NO LOAD SPEED	2800 min^{-1}

ORDER CODE:

ERM.100/2

Grinding machine ERM.100/2 is designed for High Speed Steel and TCT annular cutter resharpening. The machine is provided with a laser indicator which allows you to set up your machine very accurately.

Grinding machine ERM.100/2 enables easy annular cutter resharpening. Due to solid and precise construction and small dimensions the ERM.100/2 can be easily transported to job sites. The ERM.100/2 was designed as a user friendly machine in order to learn in a short time how to sharpen the annular cutter effectively and precisely.

Grinding tools

ADG.20A – ANGLE AIR DIE GRINDER

ADG.20A – ANGLE AIR DIE GRINDER

TECHNICAL SPECIFICATIONS

LENGTH	135 mm
NO LOAD RPM	20.000 rpm
AIR PRESSURE	6.3 bar
WEIGHT	0,4 kg
AIR CONSUMPTION	3.5 cfm
COLLET SIZE	6 mm

ORDER CODE:

ADG.20A

Angle Air Grinder with rear exhaust and variable RPM. The lightweight aluminum housing and bi-color soft grip ensure superior performance and great control. Our Air Grinders are shipped in a carrying case including a mini-box with 10 rotary burrs.

EUROBOOR
FOR PROFESSIONALS BY PROFESSIONALS

Grinding tools

ADG.25S – STRAIGHT AIR DIE GRINDER

ADG.25S – STRAIGHT AIR DIE GRINDER

TECHNICAL SPECIFICATIONS

LENGTH	148 mm
NO LOAD RPM	25.000 rpm
AIR PRESSURE	6.3 bar
WEIGHT	0,4 kg
AIR CONSUMPTION	3.5 cfm
COLLET SIZE	6 mm

ORDER CODE:

ADG.25S

Euroboor pneumatic (inline) die grinders are known around the world for quality, durability and performance. Our new line of industrial power grinders are engineered to make your job easier, safer and more efficient. The Euroboor pneumatic grinders stand up to the demanding specifications required by today's industrial manufacturing, assembly and finishing needs.

Grinding tools

EDG.500 – ELECTRIC DIE GRINDER

EDG.500 – ELECTRIC DIE GRINDER

TECHNICAL SPECIFICATIONS

MOTOR POWER	500 W
NO LOAD RPM	27000 rpm
WEIGHT	1,6 kg
COLLET SIZE	6 en 3 mm
VOLTAGE	110 – 120 / 220 – 230 V

ORDER CODE:

EDG.500

Our Electrical Die Grinder is the perfect combination of high power and excellent maneuverability. This Electrical Die Grinder is equipped with high quality, heat insulating soft grip for the most control and high ease of use. With our Electrical Die Grinder you'll complete your jobs fast and efficiently. The Electrical Die Grinder is shipped in a carrying case including a mini-box with 10 rotary burrs.

Grinding tools

AGR.1250, AGR.125 – ANGLE GRINDER

The Euroboor AGR.1250 125 mm single speed variable 1400 W anti dust motor angle grinder is fitted with a soft start feature to cope with the initial surge from such a powerful motor. Easy-to-operate paddle type on/off switch. Durable motor with high heat resistance. Rotating ear housing can be positioned every 90 degrees.

AGR.1250

TECHNICAL SPECIFICATIONS

BLADE DIAMETER	ø 125 mm
HOLE DIAMETER OF DISC	ø 22 mm
SPINDLE THREAD	M14
RATED VOLTAGE	220 V
RATED FREQUENCY	50Hz
RATED POWER INPUT	1400 W
NO-LOAD SPEED	8500 r/min

ORDER CODE:
AG.1250

High performance motor with enough power for masonry cutting and high heat resistance. The Euroboor AGR.125 single speed 125 mm angle grinder is fitted with a powerful 840 W motor and is designed to be used by the more professional user who requires a powerful machine but with a minimum of weight.

AGR.125 – ANGLE GRINDER

TECHNICAL SPECIFICATIONS

BLADE DIAMETER	ø 125 mm
HOLE DIAMETER OF DISC	ø 22 mm
SPINDLE THREAD	M14
RATED VOLTAGE	220 V
RATED FREQUENCY	50Hz
RATED POWER INPUT	840 W
NO-LOAD SPEED	10000 r/min

ORDER CODE:
AGR.125

Abridged statement of general terms and conditions

OF EUROBOOR B.V. in Zoetermeer, the Netherlands

1. GENERAL

All our offers, quotations, agreements and their implementations are subject to the General Terms and Conditions as deposited at the Chamber of Commerce and Industry in The Hague. The applicability of all other General Terms and Conditions, in particular those of the client and/or contractor is explicitly excluded.

2. QUOTATIONS

All our quotations are in principle offered without any obligation unless a given period of validity is indicated. All information and/or data provided with the quotation remains our intellectual property.
We cannot be deemed liable for incorrect statement of the information provided with our quotations.

3. AGREEMENTS

Agreements, including further commitments and/or modifications, are only binding following our explicit confirmation or acceptance. In this regard only our records are conclusive. We are entitled to demand sureties in advance as well engage third parties for the implementation of the agreement.

4. PRICES

Our prices are calculated on the basis of purchasing costs and other cost price factors and based on delivery ex-factory/store and exclusive of Value Added Tax, shipping, etc. Changes in prices are explicitly reserved.

5. DELIVERIES AND LEADTIMES

Deliveries commence in principle on leaving our factory/store. Only those part-deliveries that are designated as such by us are permitted to be free at destination. Delivery times are stated as approximate. Exceeding these times does not give rise to any claims to damages in any event. Cancellation is only permitted after repeatedly (excessively) exceeding the delivery time and following written notice of default by the other party except for force majeure on our part. On receipt the delivered goods must be inspected for damage and defects which must be reported on the delivery and despatch notes. Returns, on our agreement, shall be at the other parties' costs.

6. TRANSPORT

Transport packaging is at the cost and risk of the other party, even if the transport documents state otherwise.

7. FORCE MAJEURE

In the event of force majeure we shall have the right to suspend or dissolve our obligations.

8. LIABILITY

Except for potential indemnity insurance, our liability is limited to the net invoice value of the delivered goods. As regards the remainder, the other party indemnifies us against every claim to damage compensation disregarding the cause.

9. COMPLAINTS

Complaints must be reported to us in writing within 8 days of delivery (for invoices this is 8 days following the invoice date), whereupon the other party is bound by the agreement. As regards hidden defects a period of 8 days after detection applies and an ultimate period of 6 months after delivery. Returns may only proceed following our prior written permission.

10. PAYMENT AND RETENTION OF TITLE

Payment shall be made no later than 14 days after date of invoice into our bank account. Interest at 1.5% per (part of a) month shall be incurred if this period is exceeded. All further invoicing costs incurred shall be charged to the negligent other party. In the event of late payments, the agreement may be dissolved by us without recourse to the courts, whereupon all our title rights are restored. The extrajudicial collection costs shall be no less than 15% of the total amount owed. Interest and costs of the claims are settled first. Insofar as the other party has not fulfilled its obligations in their entirety, all goods supplied by us which are still with the other party shall remain our (joint) property, which on the introduction of the New Dutch Civil Code has been lost as a non-possessory pledge concerning the goods for our (surety) collateral and that for the value of what the other party is indebted to us. In the event of resale of (yet) unpaid goods the other party is obliged to cooperate with their assignment.
The other party shall be obliged to draw up a similar retention of title as regards his purchaser.

11. DISPUTES

Disputes will be submitted to the competent court in our place of business unless we choose otherwise.

Notes

EUROBOOR
FOR PROFESSIONALS BY PROFESSIONALS

Euroboor sponsors
No Limit European Tractor Pulling Team

YOUR DEALER:

EUROBOOR
FOR PROFESSIONALS BY PROFESSIONALS

KRYPTONSTRAAT 110 2718 TD ZOETERMEER THE NETHERLANDS T. +31(0) 79 361 49 90 F. +31(0) 79 361 49 89 WWW.EUROBOOR.COM